LLC Resonant Converter

Design Criteria and Device Selection

Qiaoliang CHEN
Xi’an Lonten Renewable Technologies INC.

Contents

- Background
- LLC resonant converter design
- Device selection

Resonant converters for DC-DC

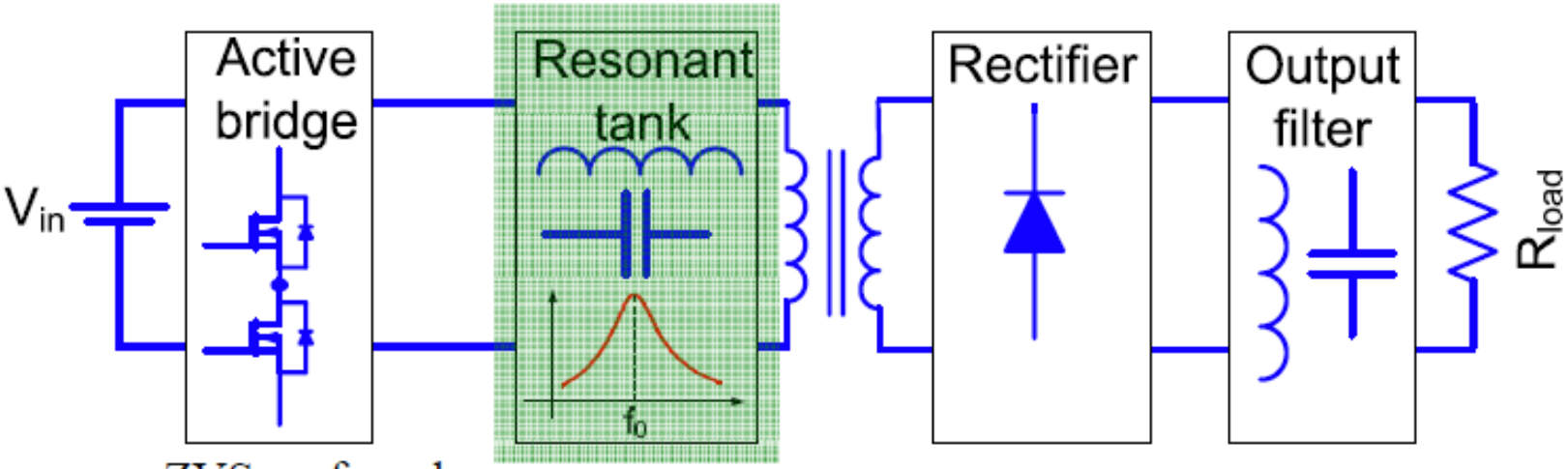

ZVS preferred for MOSFET

- **Variable frequency, fixed duty cycle**
- **Resonant (sine) mode power transfer**

Opportunities for improvement

Advantages

- Low switching loss
- Higher fs and high power density

- PWM Converter: PWM Averaging with Low Pass Filter

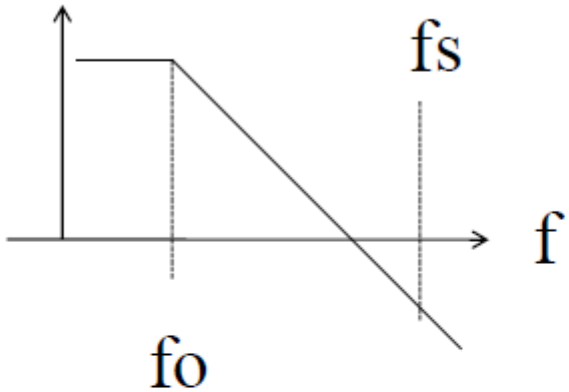

fo<<fs

- Resonant Converter: Frequency Selection with Band Pass Filter

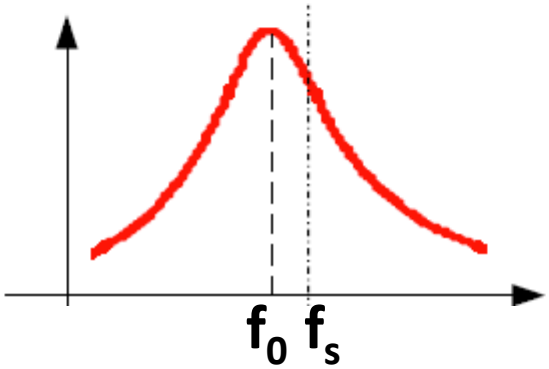

fs is close to fo

Series resonant converter

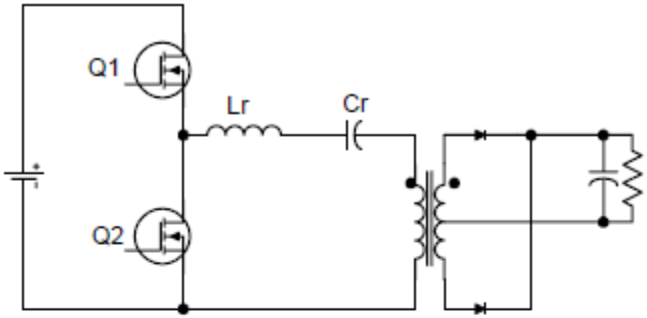

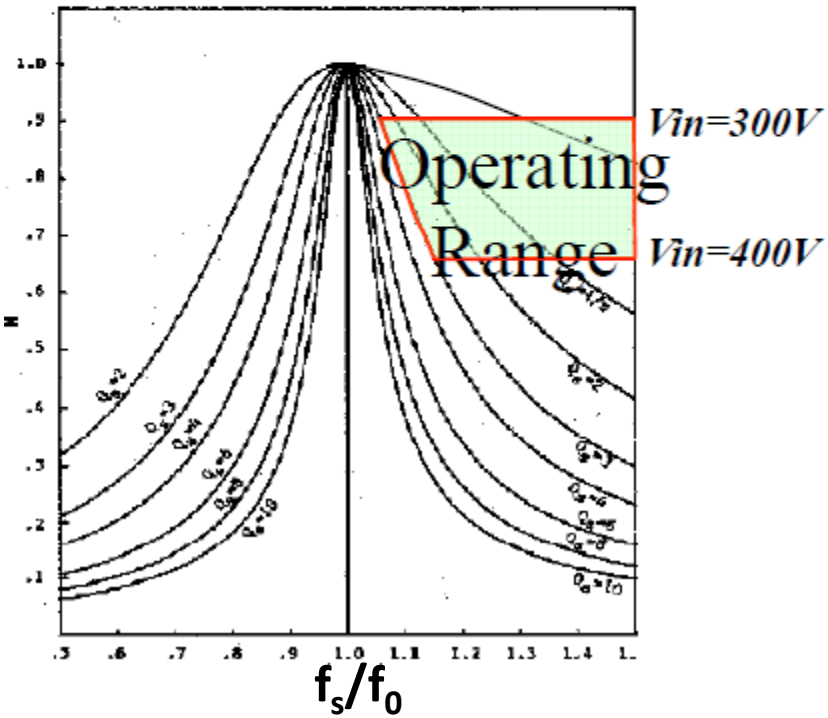

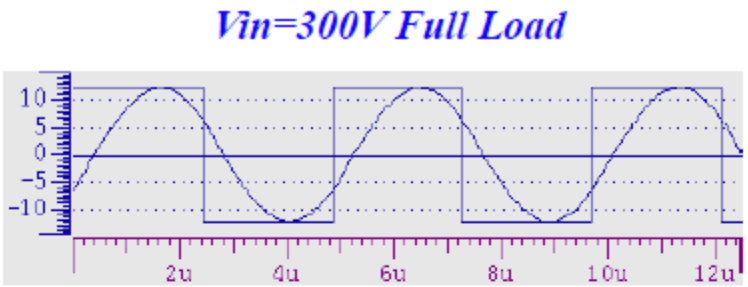

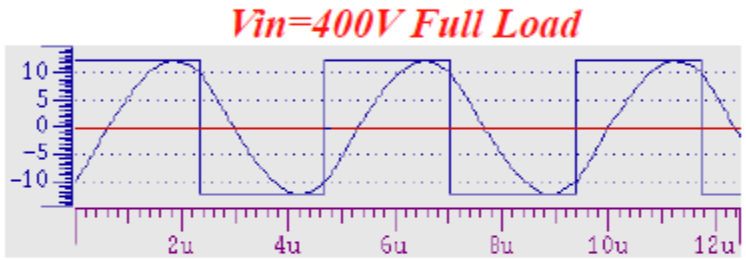

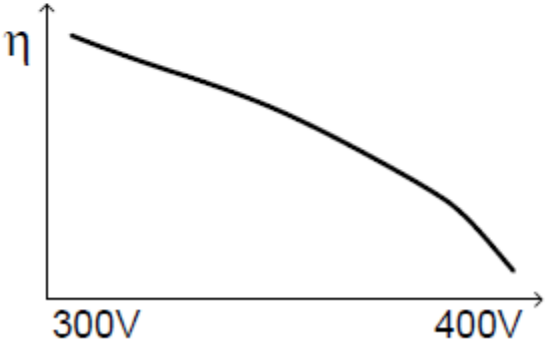

Parallel resonant converter

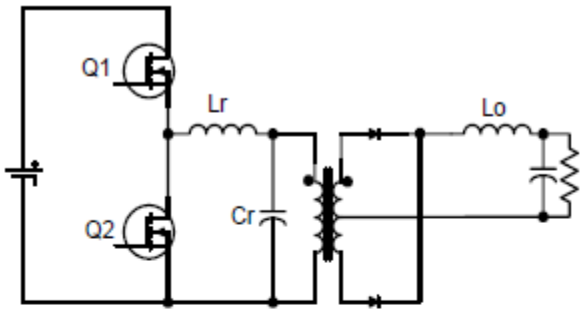

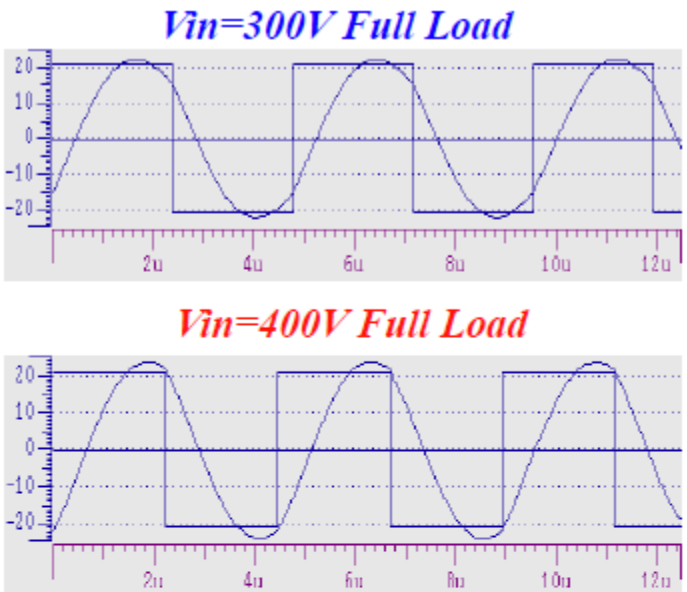

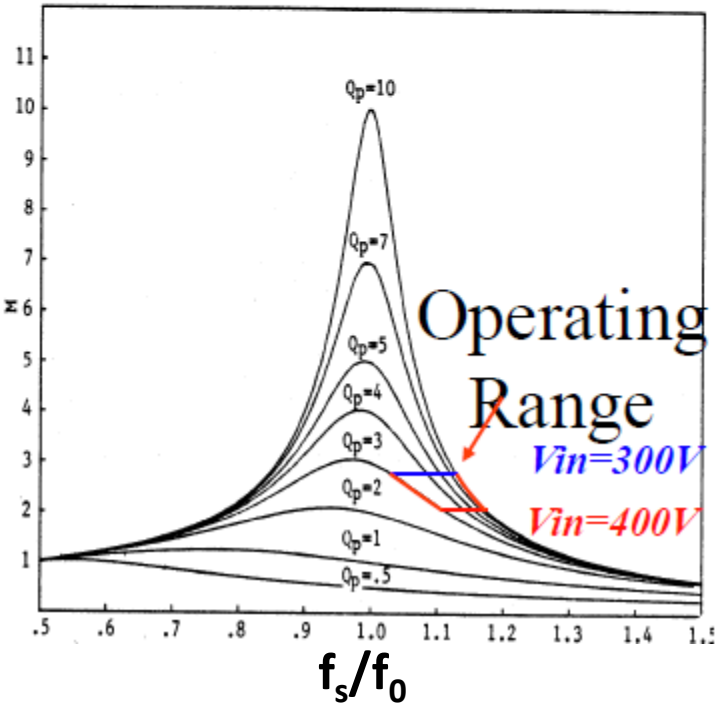

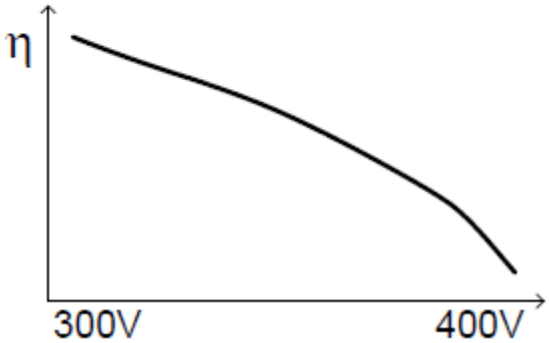

Series parallel resonant converter

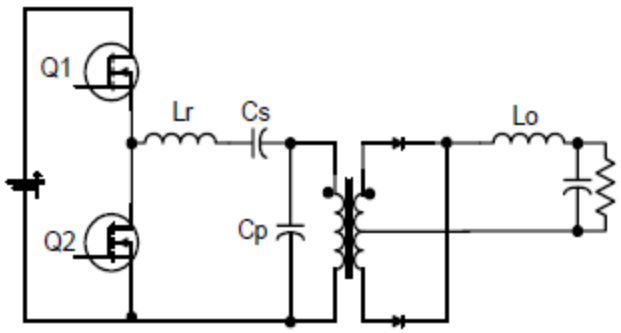

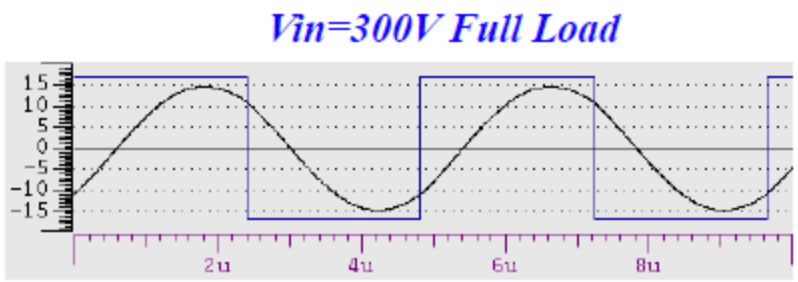

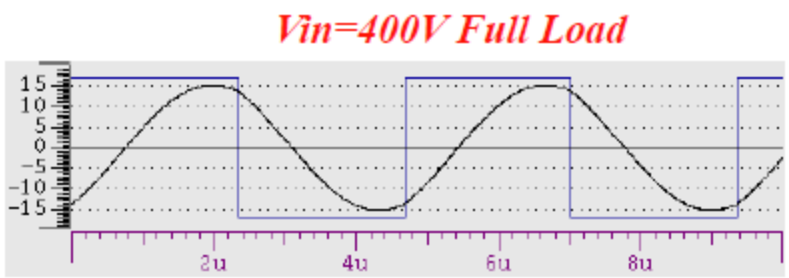

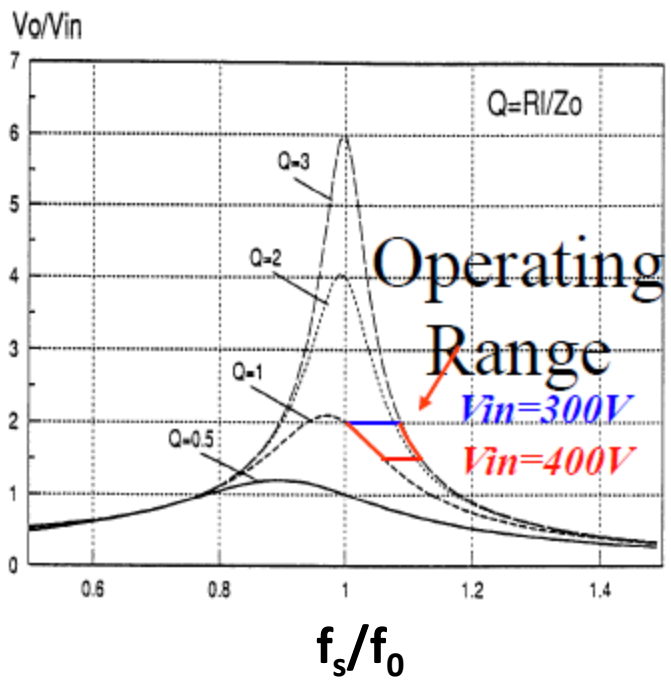

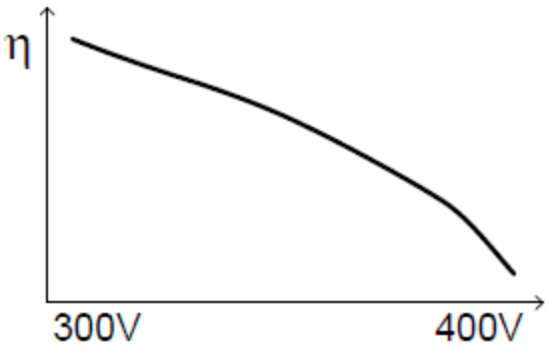

LLC resonant converter

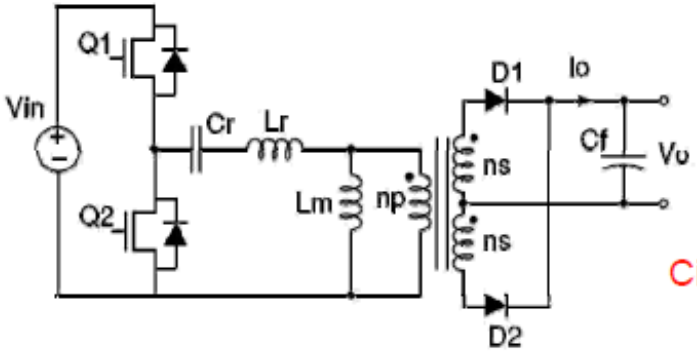

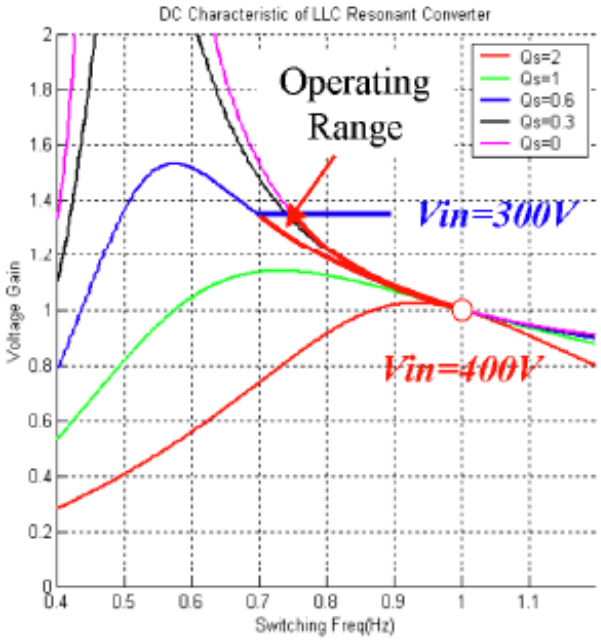

Circulating energy

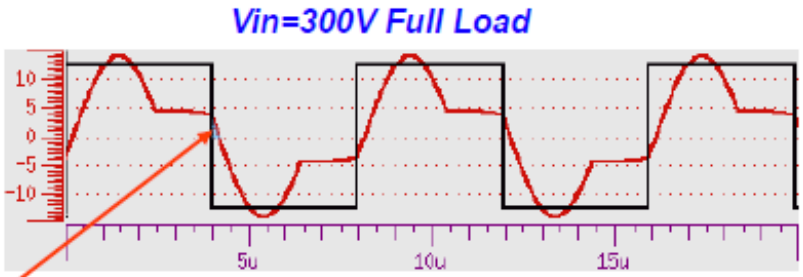

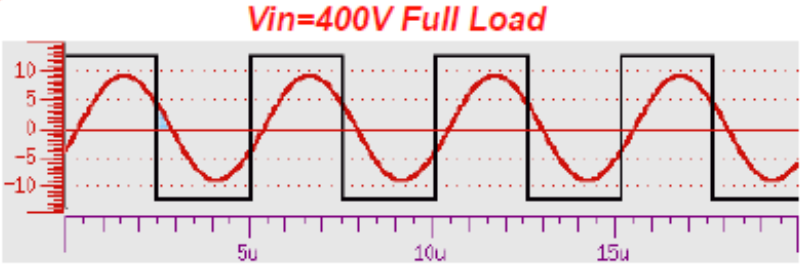

- Low voltage stress on output rectifier
- Less circulating energy
- Insensitive to load change
- Zero to Full load ZVS capability
- No diode reverse recovery problem

- **LLC resonant converter design**

LLC key parameters

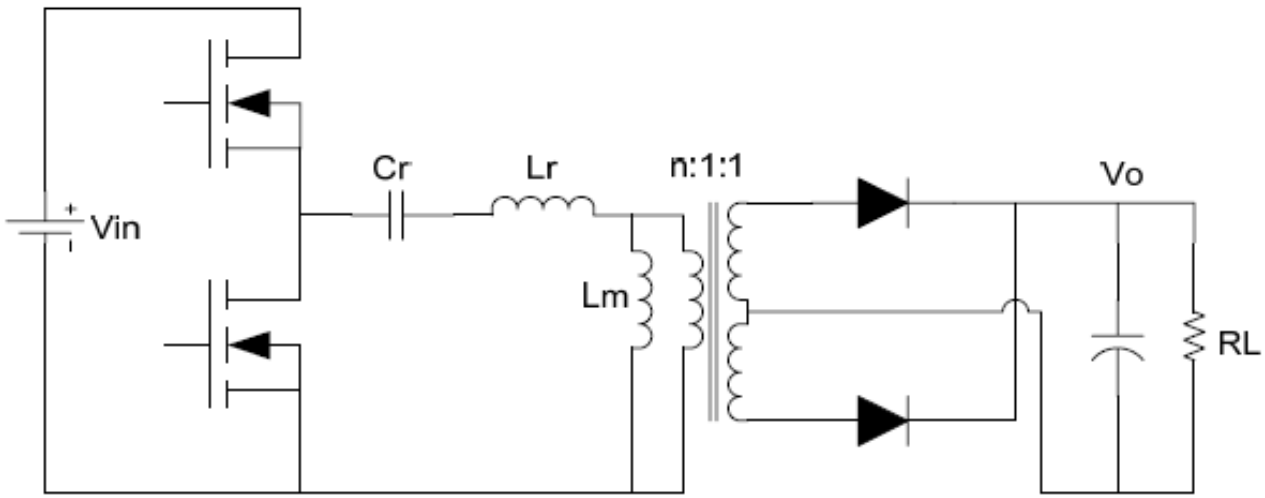

$$f_0 = \frac{1}{2\pi\sqrt{L_r C_r}}$$

$$L_n = \frac{L_m}{L_r}$$

$$Q = \frac{\sqrt{\frac{L_r}{C_r}}}{n^2 R_L}$$

Resonant Frequency **Inductor Ratio** **Quality factor**

Operation principles

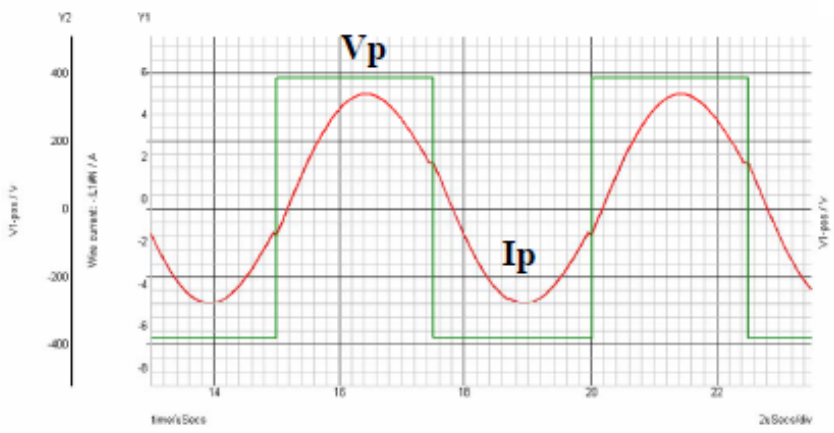

$f_S = f_0$

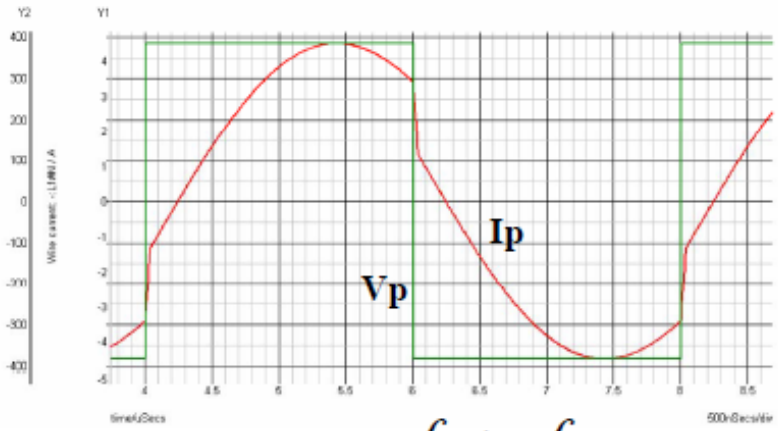

$f_S > f_0$

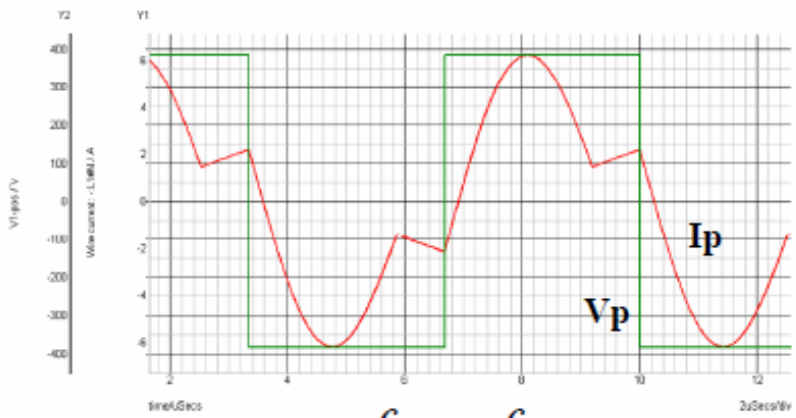

$f_S < f_0$

- When switching frequency is higher than resonant frequency, circuit operates as SRC
- When switching frequency is lower than resonant frequency, magnetizing inductor participates resonant
- At resonant frequency, circuit operation optimally

LLC topological modes ($f_s < f_0$)

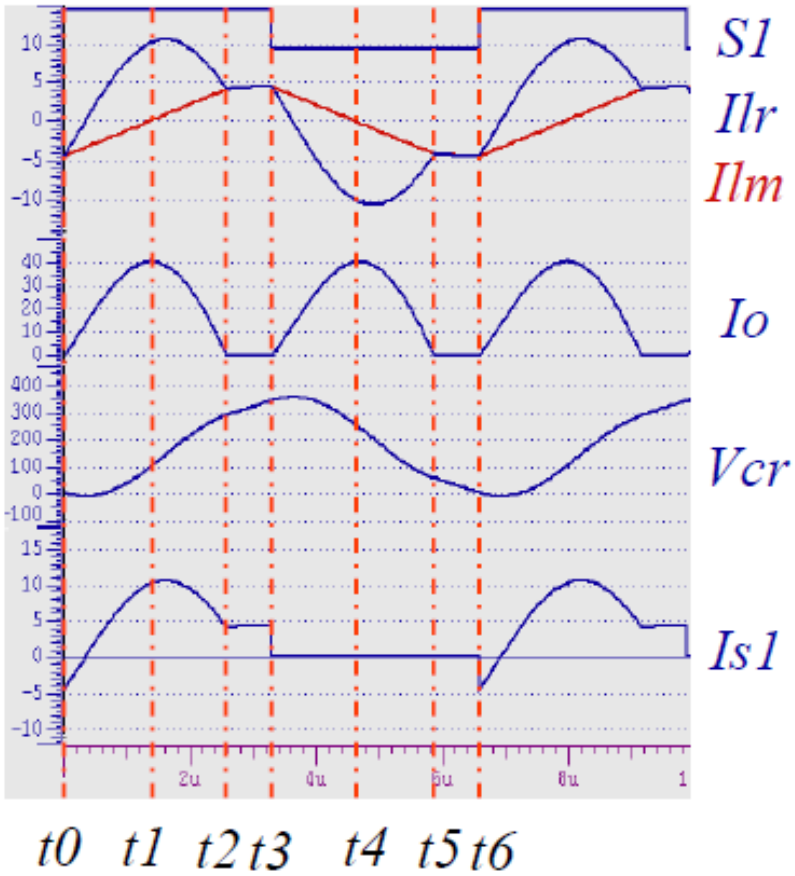

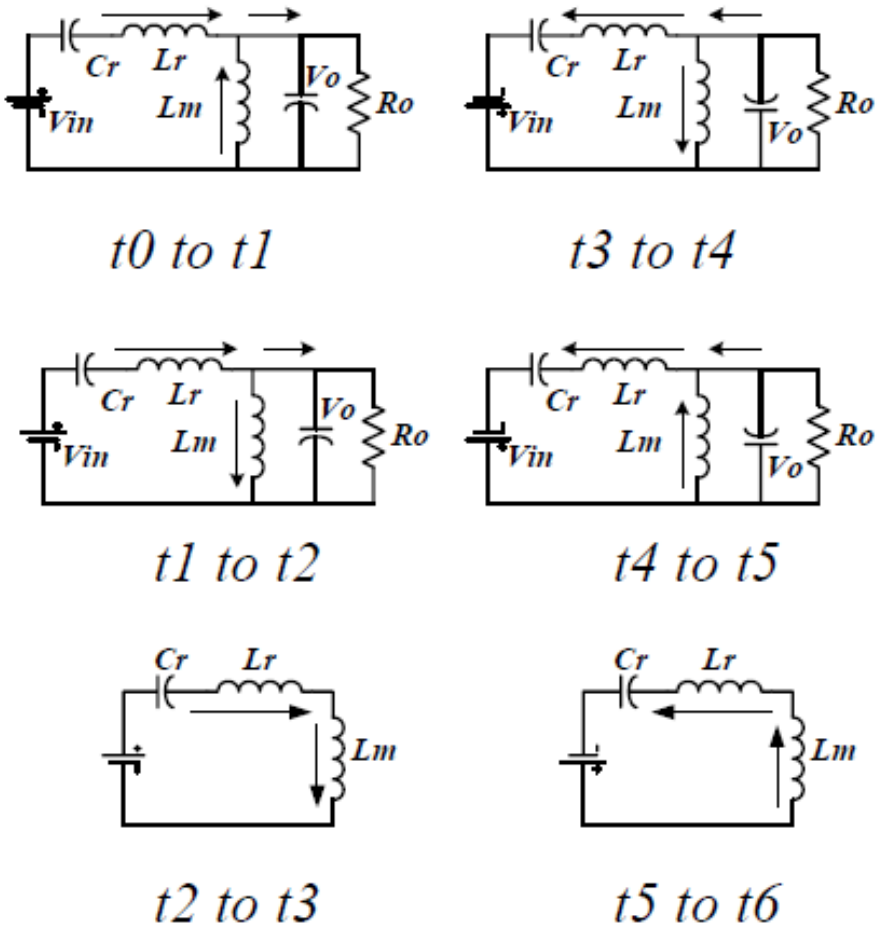

Gain characteristic of LLC

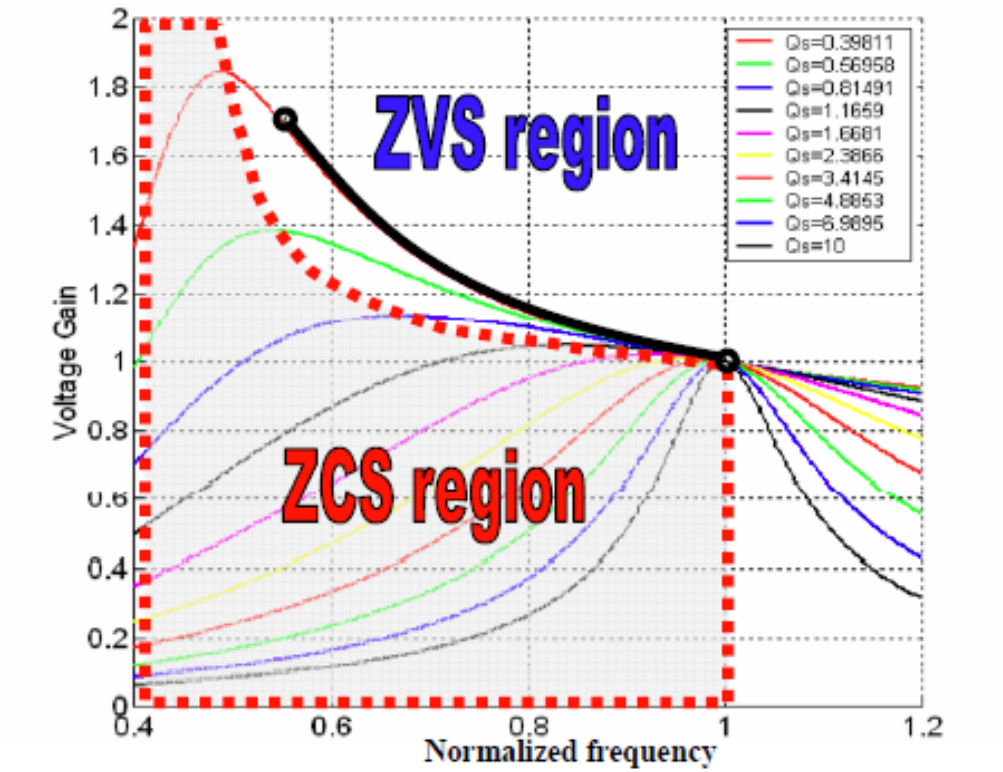

$$g = \frac{n \cdot V_O}{V_{in}}$$

$$Q = \frac{\sqrt{Lr/Cr}}{n^2 R}$$

$$f_0 = \frac{1}{2\pi\sqrt{L_r C_r}}$$

$$f_n = \frac{f_S}{f_0}$$

- At resonant frequency, gain is equal to one, for all load conditions
- Gain can be large than one, when switching frequency is lower than resonant frequency
- High efficiency is expected at resonant frequency
- At 400V input, switching frequency is resonant frequency
- During holdup time, switching frequency is reduced

Turns ratio selection

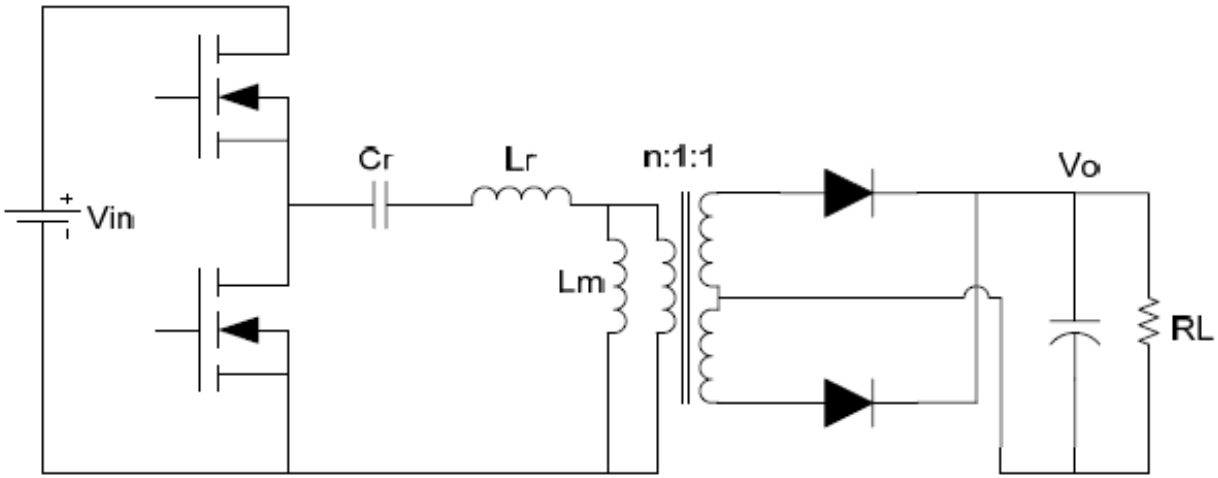

- At 400V input, converter is desired to operate at resonant frequency
- Converter gain is equal to one

For half bridge $\dfrac{nV_o}{V_{in}/2} = 1$ → $n = \dfrac{V_{in}}{2V_o}$

For full bridge $\dfrac{nV_o}{V_{in}} = 1$ → $n = \dfrac{V_{in}}{V_o}$

The actual n should be a litter higher

Design goal of LLC resonant converter

- High efficiency requirement
  - Required for normal operation, most at resonant frequency
  - Low conduction loss
    - Low RMS current
  - Low switching loss
    - ZVS turn on
    - Low turn off current
- Operation range requirement
  - High peak gain to ensure low input voltage operation

Choice of Lm

Criteria 1: Primary Side RMS Current at Normal Operation

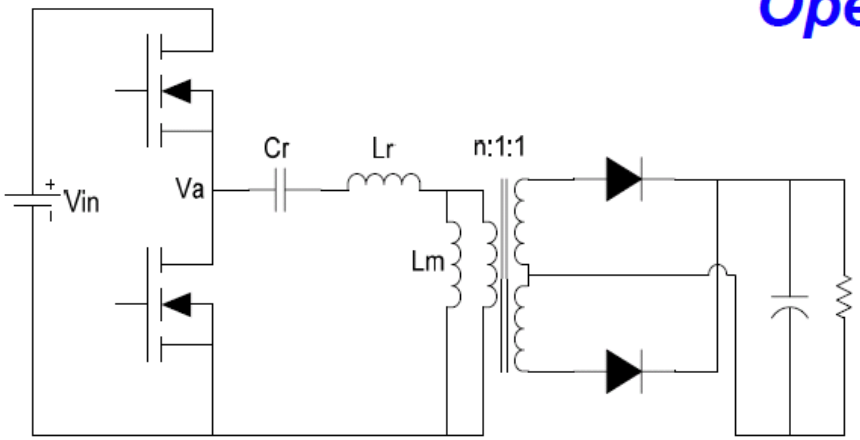

$$I_{RMS_P} = \frac{1}{4\sqrt{2}} \frac{V_O}{nR_L} \sqrt{\frac{n^4 R_L^{\ 2} T^2}{L_m^{\ 2}} + 4\pi^2}$$

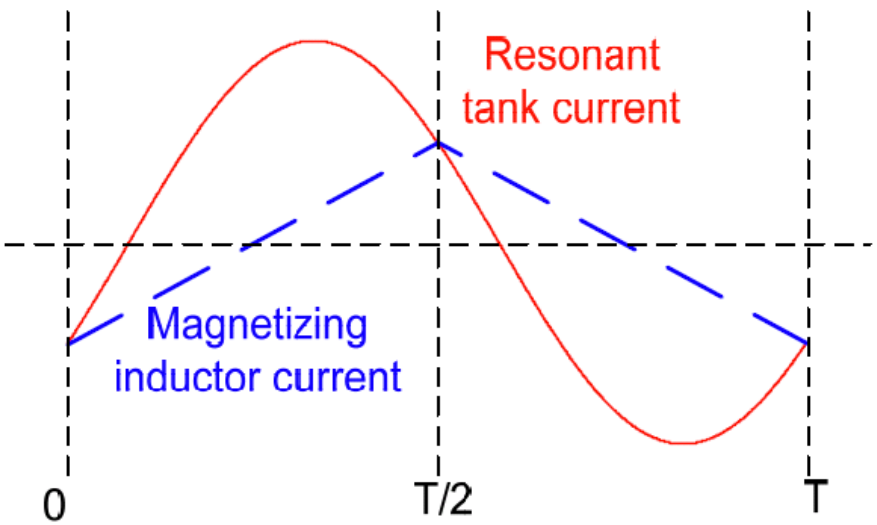

- Primary side RMS current is determined by magnetizing inductor
- Larger Lm the better

Choice of Lm

Criteria 2: Secondary Side RMS Current

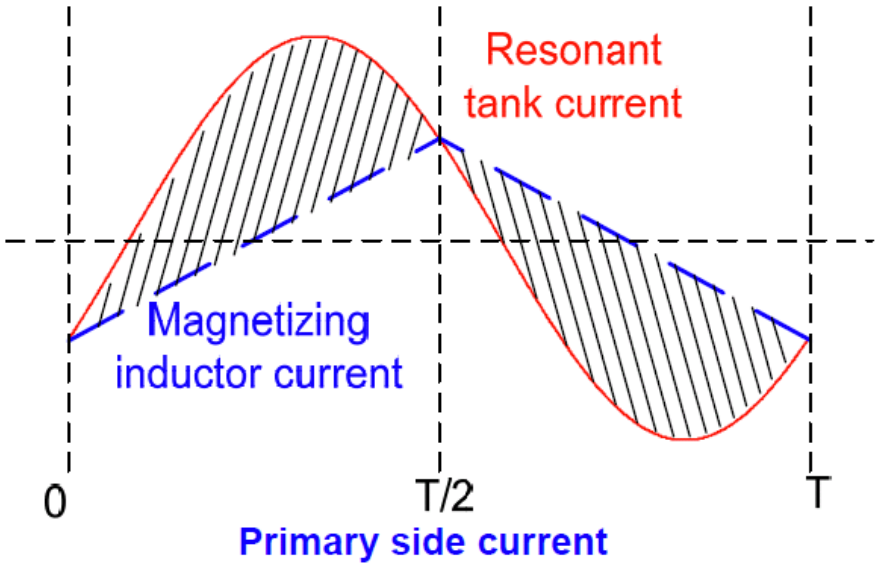

$$I_{RMS_S} = \frac{1}{4}\frac{V_O}{nR_L}\sqrt{\frac{5\pi^2 - 48}{12\pi^2}\frac{n^4 R_L^{\ 2} T^2}{L_m^{\ 2}} + 1}$$

- Secondary side current is the difference between resonant tank current and magnetizing current
- Larger Lm the better

Choice of Lm

Criteria 3: Zero Voltage Switching

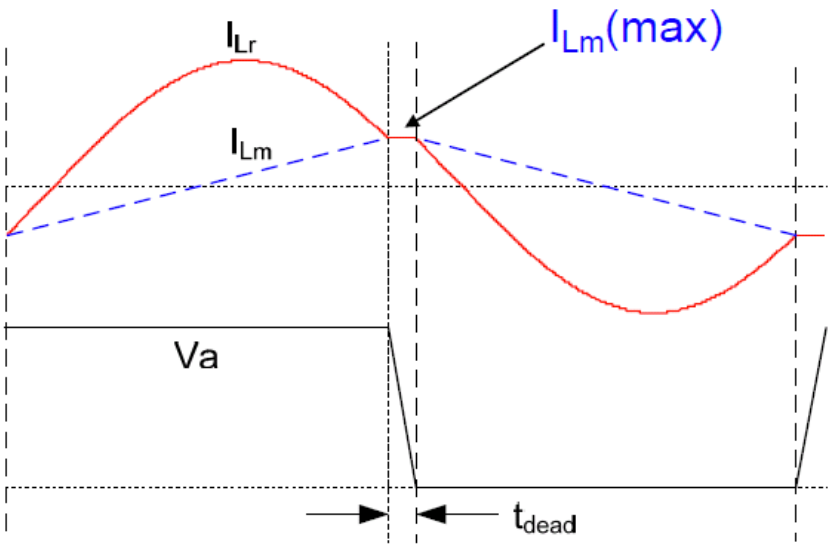

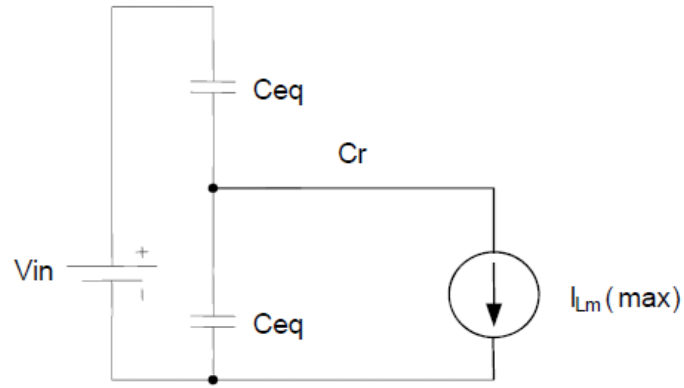

$$I_{Lm}(\max) = \frac{nV_o}{L_m}\frac{T}{4}$$

- Turn off current should be able to discharge junction caps during dead-time

$$L_m \le \frac{T \cdot t_{dead}}{16C_{eq}}$$

Example

1MHz switching frequency

100ns dead time

470pF junction capacitor

$$L_m = 13uH$$

How to Obtain C_{eq} from Device Datasheet?

Dynamic characteristics

Input capacitance	C_{iss}	V_{GS}=0 V, V_{DS}=100 V, f=1 MHz	-	2800	-	pF
Output capacitance	C_{oss}		-	130	-	
Effective output capacitance, energy related[5]	$C_{o(er)}$	V_{GS}=0 V, V_{DS}=0 V to 480 V	-	130	-	
Effective output capacitance, time related[6]	$C_{o(tr)}$		-	340	-	

[5] $C_{o(er)}$ is a fixed capacitance that gives the same stored energy as C_{oss} while V_{DS} is rising from 0 to 80% V_{DSS}.

[6] $C_{o(tr)}$ is a fixed capacitance that gives the same charging time as C_{oss} while V_{DS} is rising from 0 to 80% V_{DSS}.

How to Obtain C_{eq} from Device Datasheet?

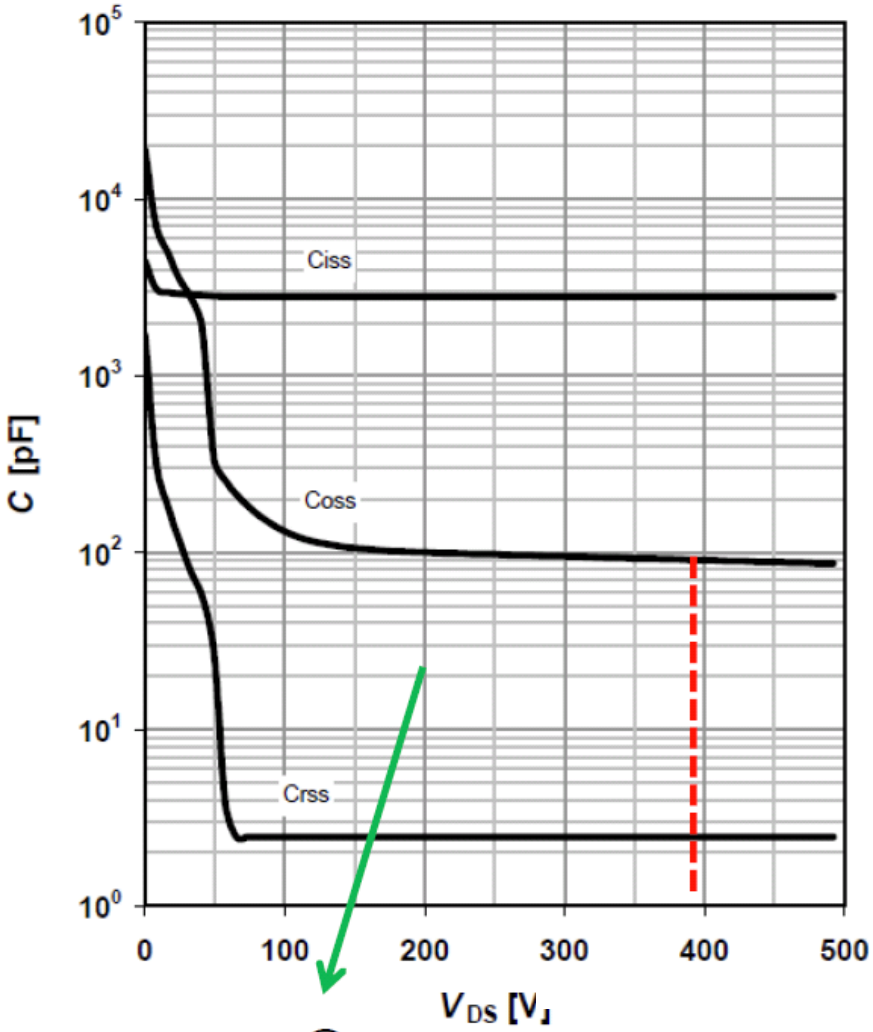

Qeq

Curve fitting to get Qeq

Ceq=Qeq/Vdss

Trade-off of choosing dead time

$$L_m \le \frac{T \cdot t_{dead}}{16C_{eq}}$$

$t_{dead} \uparrow$

$L_m \uparrow$

- Smaller turn off current
- Smaller magnetizing current

- Increase RMS current due to duty cycle loss

$t_{dead} \downarrow$

$L_m \downarrow$

- Smaller duty cycle loss

- Larger magnetizing current
- Larger turn off loss

Trade-off of choosing dead time

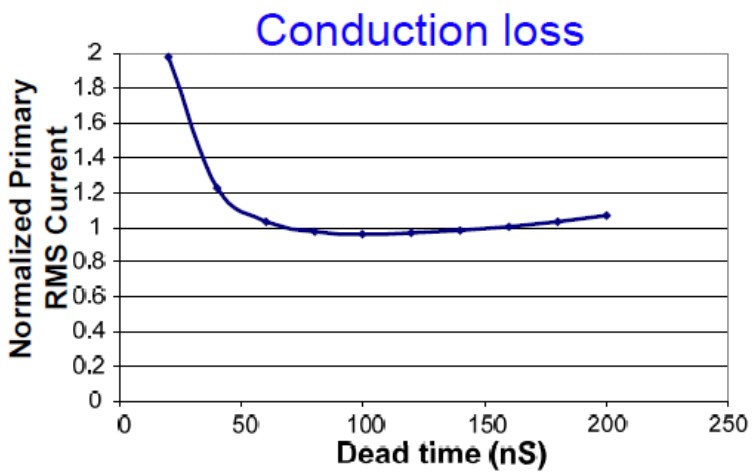

- There is an optimal dead time which can play the trade-off between the switching loss and conduction loss

Gain requirements for wide operation range

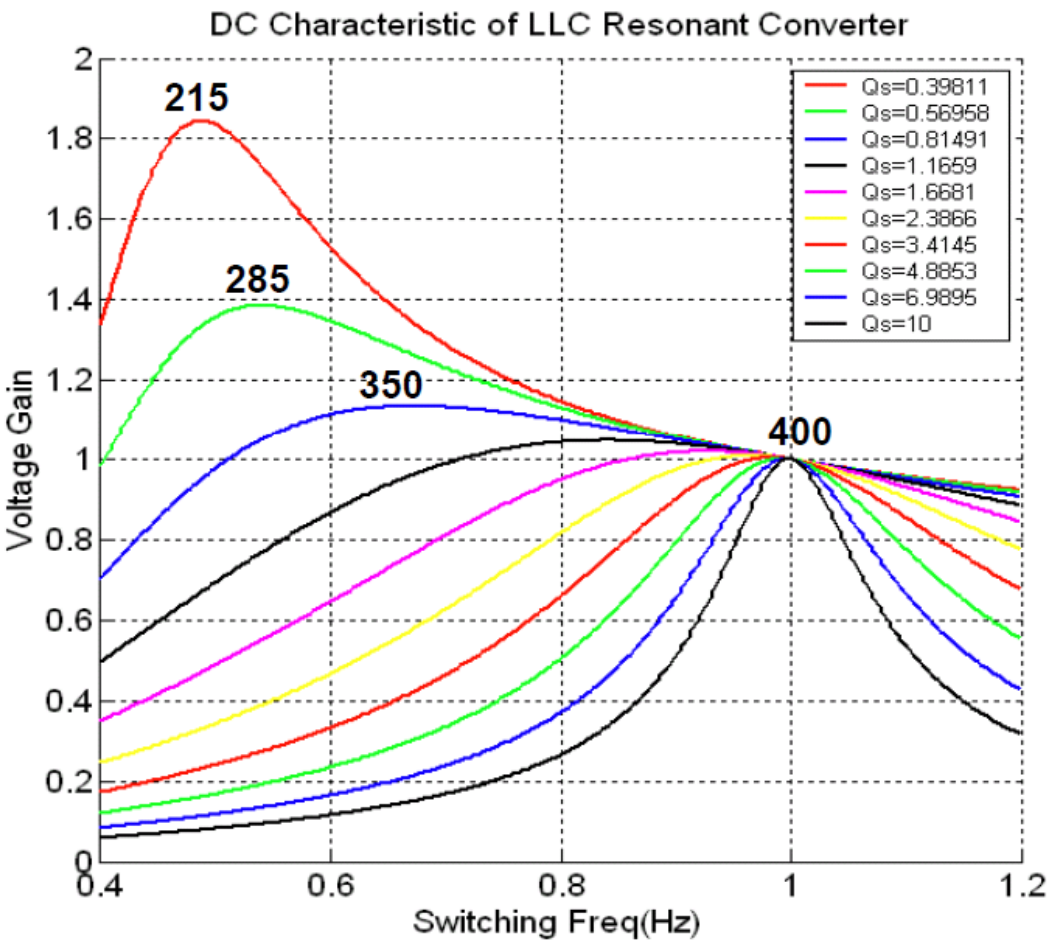

$$V_{\min} = \frac{400}{g_{pk}}$$

- **Minimum operation voltage is determined by the achievable peak gain**

Achievable peak gain for different Ln and Q

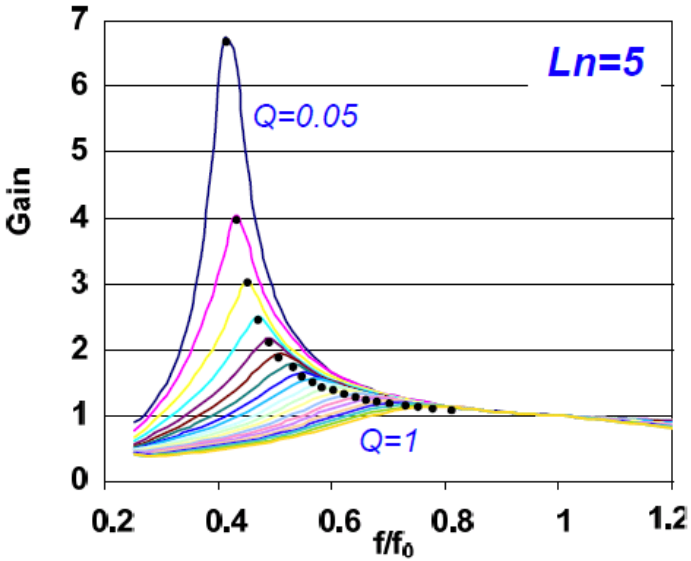

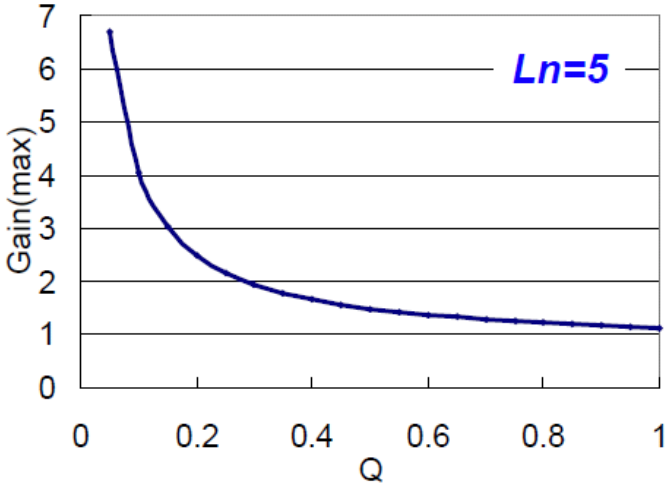

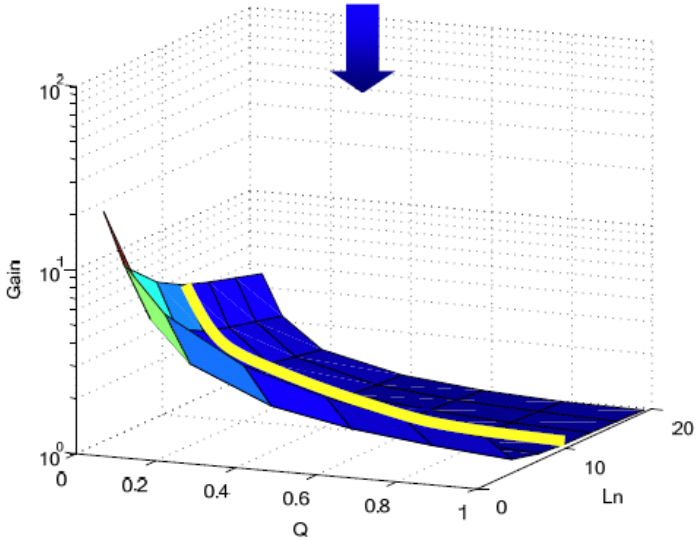

- For each Ln, the achieved maximum gain for different Q is determined — peak gain curve
- For different Ln, the achieved maximum gain curve is determined — peak gain surface

Peak gain for holdup time requirement

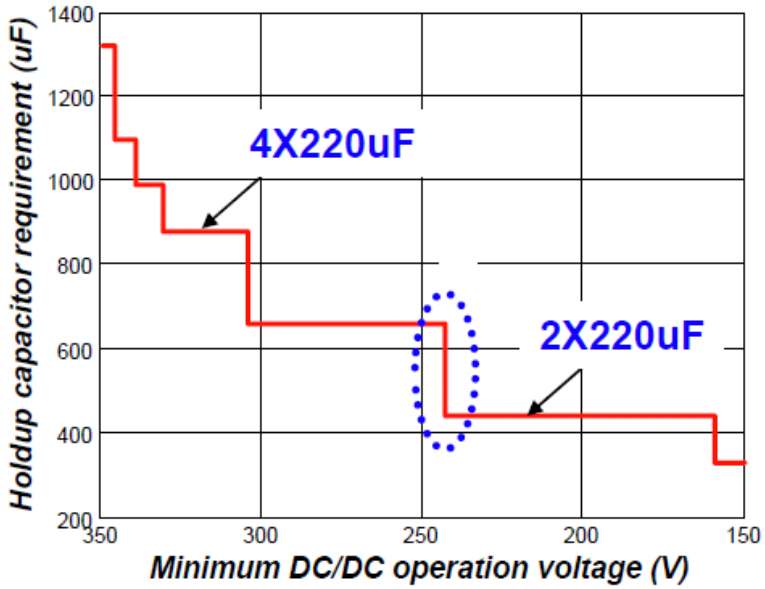

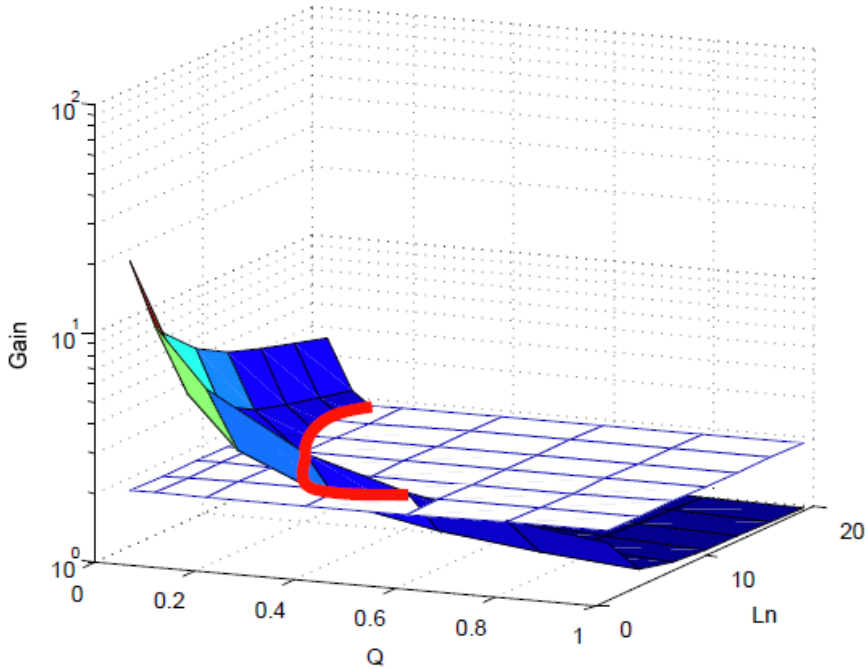

- Maximum gain is determined to meet holdup time requirement
- Determined gain plane intersects peak gain surface — boundary line for specific peak gain can be plotted

Peak gain for designed Lm

$$L_n Q = \frac{2\pi f_0}{n^2 R_L} L_m$$

$$L_n = \frac{L_m}{L_r} \qquad Q = \frac{\sqrt{L_r / C_r}}{n^2 R_L}$$

$$L_n \cdot Q = 3$$

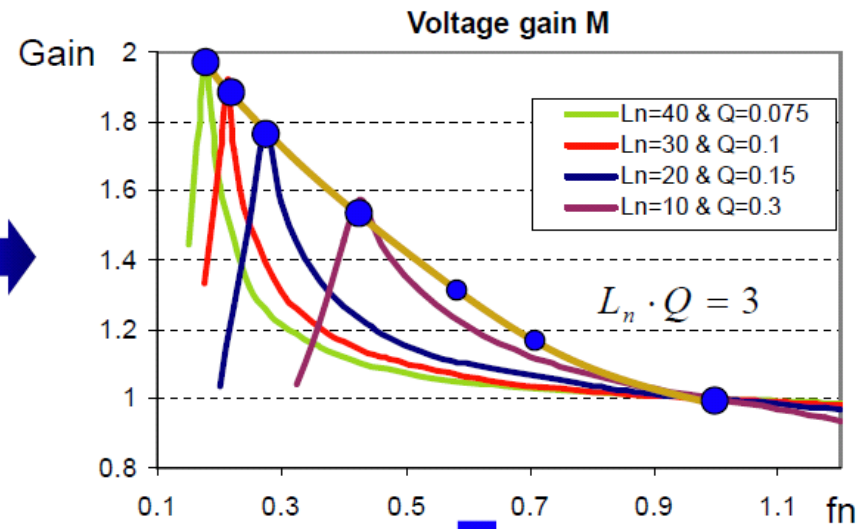

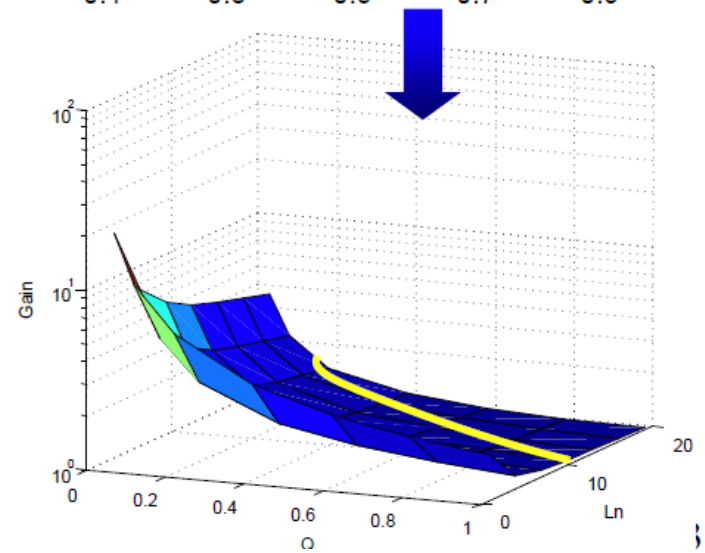

- For designed Lm, product of Ln and Q should be constant
- For designed Lm, the maximum gain for different Q & Ln is determined — peak gain curve

Choice of Ln
to ensure operation range

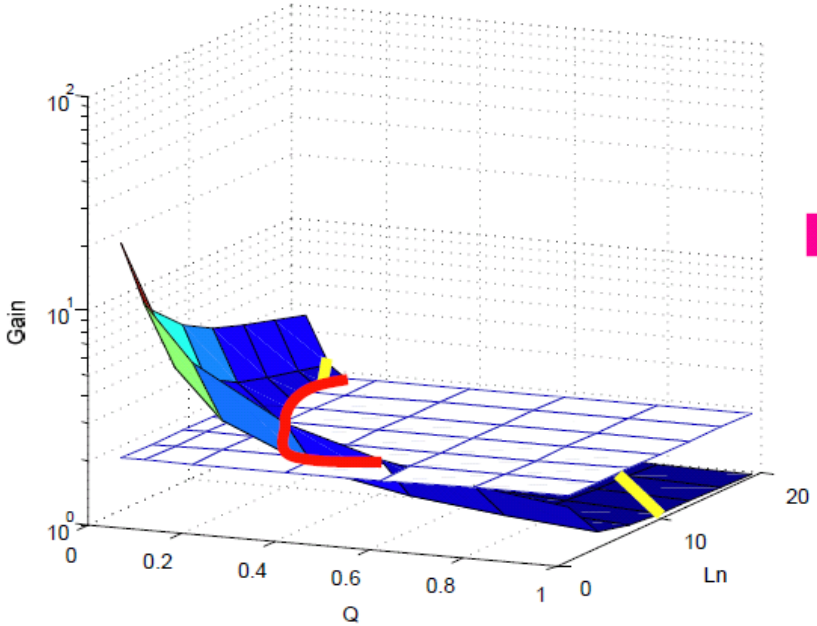

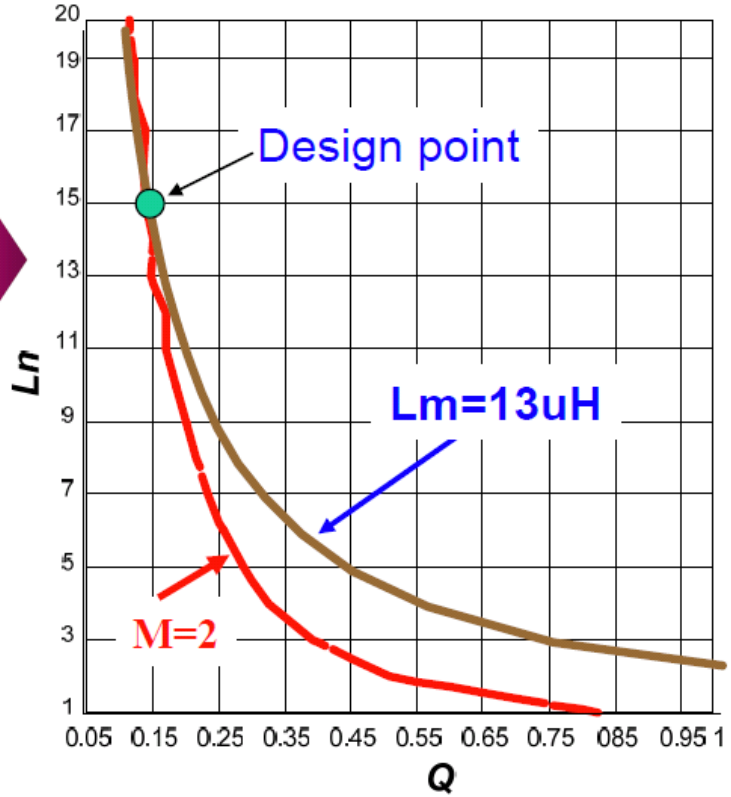

- For designed Lm, peak gain curve is plotted
- For holdup time maximum gain, peak gain curve is plotted

Design point is the intersection point

Design results for 1MHz 400V-48V LLC resonant converter

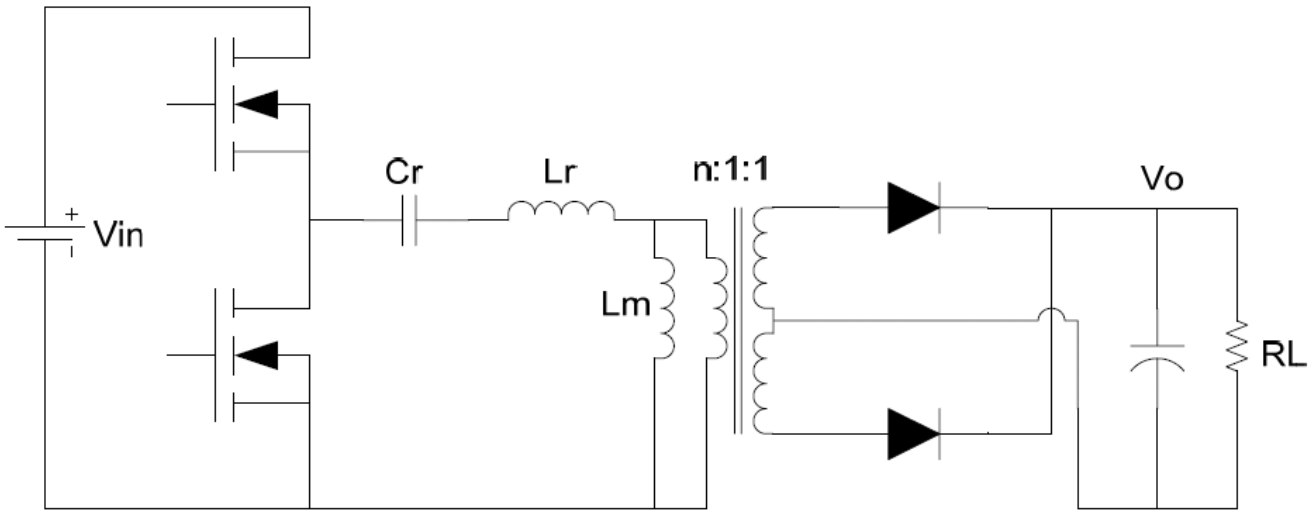

Transformer turns ratio	$n = 4$
Magnetizing inductor	$L_m = 13\mu H$
Inductor ratio	$L_n = 15$
Resonant inductor	$L_r = 0.85\mu H$
Resonant capacitor	$C_r = 30nF$

Primary side RMS Current

$$I_{RMS} = 6.1A$$

Holdup time capacitor

$$C_{bus} = 440\mu F$$

- **Device selection**

Gate charge definition

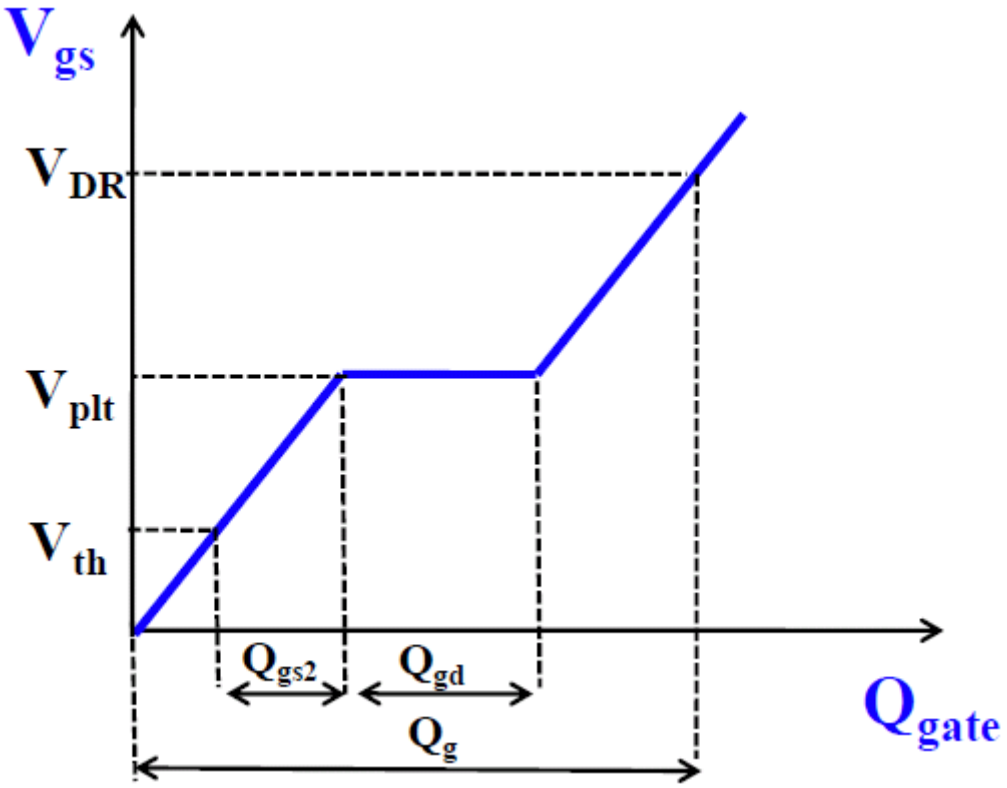

Figure of Merit (FOM) for power devices

* "New Unipolar Switching Power Device Figures of Merit"
Alex Q.Huang, IEEE Electron Device Letters, VOL.25 No.5, MAY 2004

Previous people use Figure of Merit to evaluate device technology

$$FOM = Q_{gd} R_{dson}$$

But this FOM is based on a rough loss analysis model

Assumption: *Qgd* dominates the switching loss.

Total power loss:

$$P_{loss} = \underbrace{\frac{V_D I_D}{2}\frac{Q_{gd}}{i_{g,av}} f}_{\text{Turn on loss}} + \underbrace{\frac{V_D I_D}{2}\frac{Q_{gd}}{i_{g,av}} f}_{\text{Turn off loss}} + \underbrace{I_{rms}^2 R_{on}}_{\text{Cond. loss}}$$

Assume MOSFET is build by paralleling elementary cells:

$$Q_{gd} = Q_{gd,sp} \cdot A \qquad R_{on} = \frac{R_{on,sp}}{A}$$

$$P_{loss} = \frac{V_D I_D Q_{gd,sp} A f_s}{i_{g,av}} + \frac{I_{rms}^2 R_{on,sp}}{A}$$

Minimum total loss when $\frac{dP_{loss}}{dA} = 0$ ⇒ $P_{loss,\min} = 2 I_{rms} \cdot \sqrt{\frac{V_D \cdot I_D \cdot f_s}{i_{g,av}}} \cdot \sqrt{Q_{gd,sp} \cdot R_{on,sp}}$

How to play trade-off between Ceq and R_{dson}?

For a given device technology, Ceq*Rdson is nearly constant.
Lower Rdson, Higher Ceq.

$$L_m \le \frac{T \cdot t_{dead}}{16 C_{eq}}$$

Ceq ↑ → Lm ↓ → Irms ↑

Ceq ↑ → Rds ↓

} Conduction loss could increase or decrease

Ceq ↑ → Slow switching speed and higher turn-off current → Switching loss increases

There is no best devices, but there do exist the most suitable devices for a given application. Don't always select MOSFET with the smallest Rdson, (60R099 is not always the best)

Mode transition in ZVS region

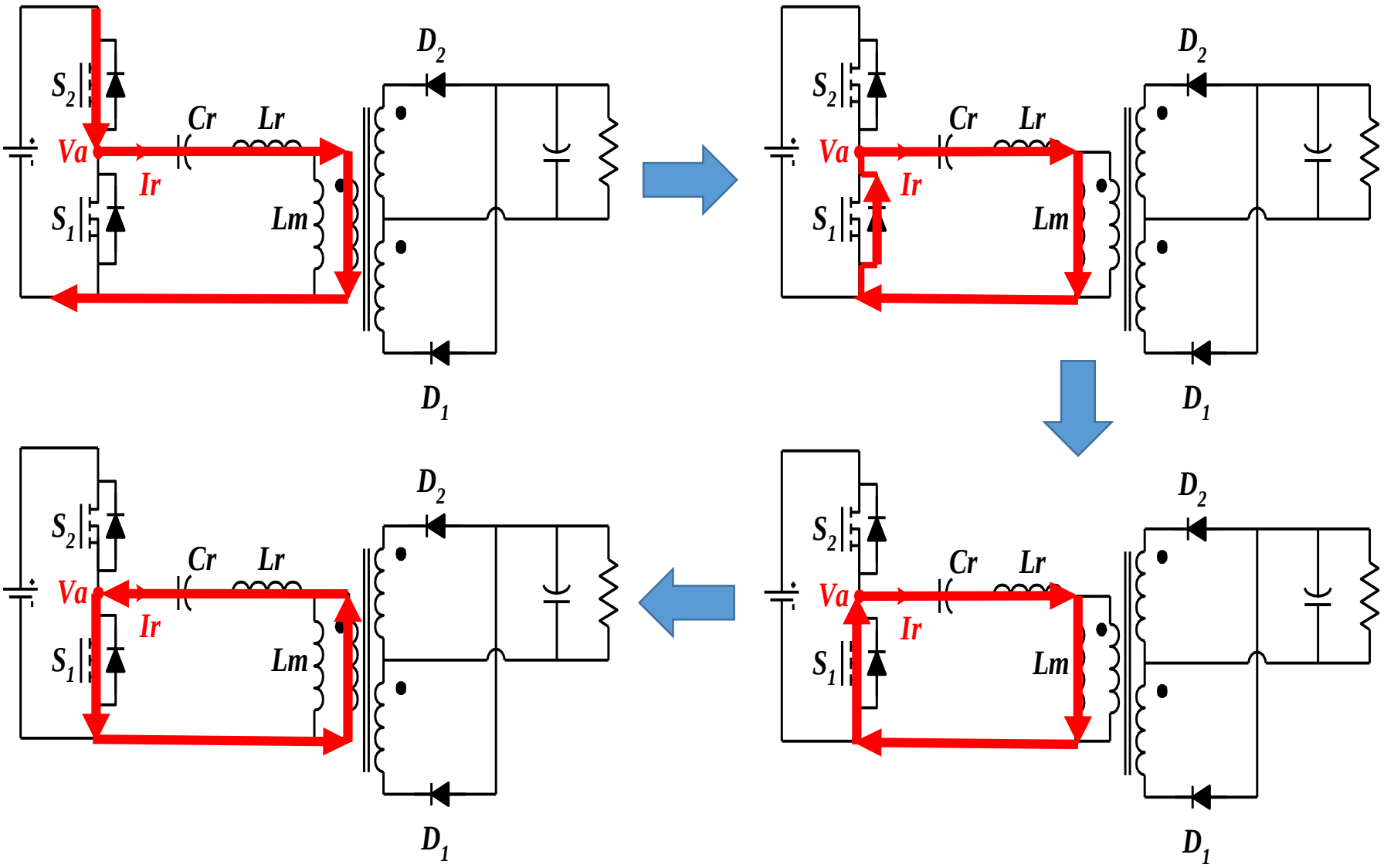

Mode transition in ZCS region

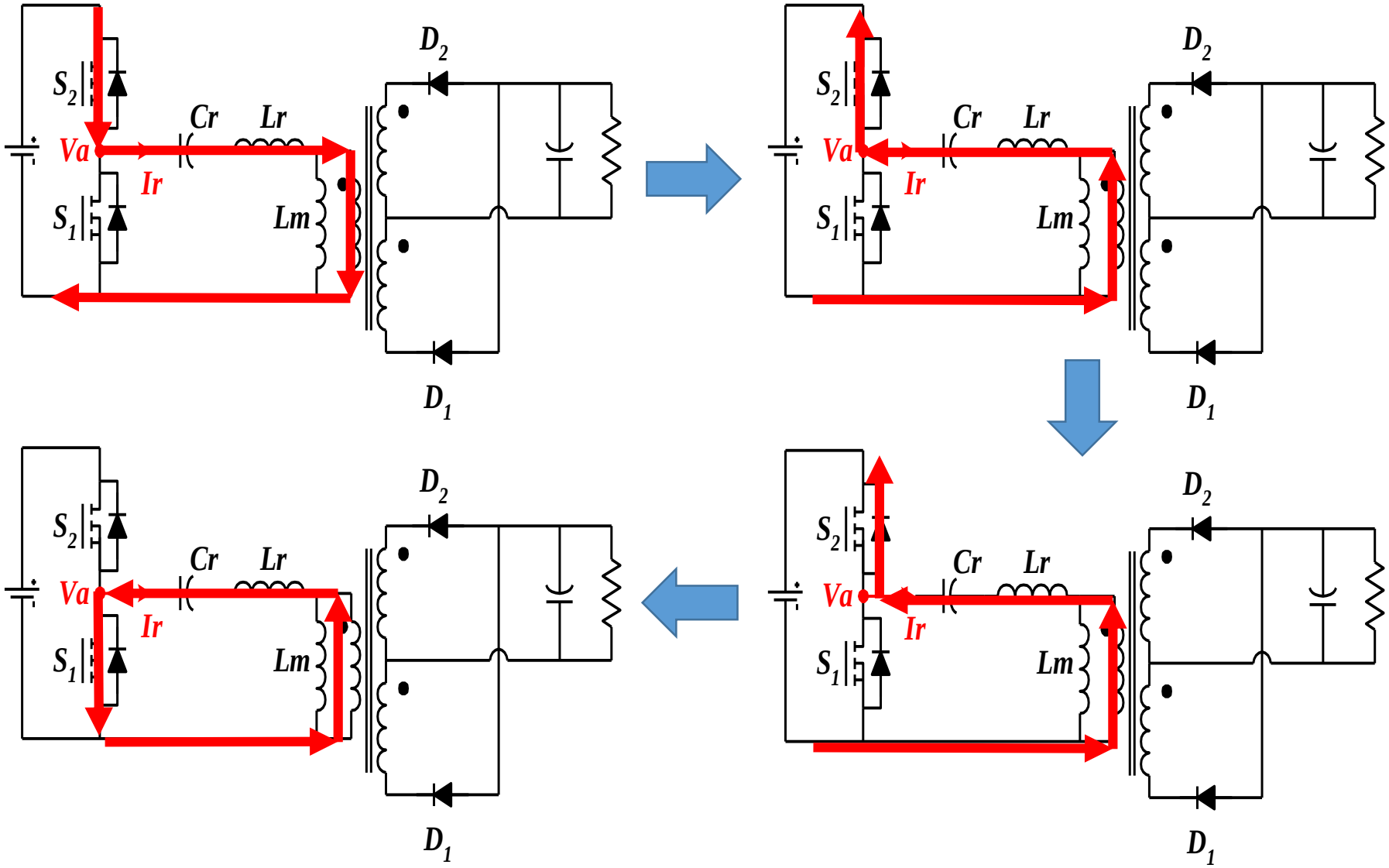

Operation Stage 1

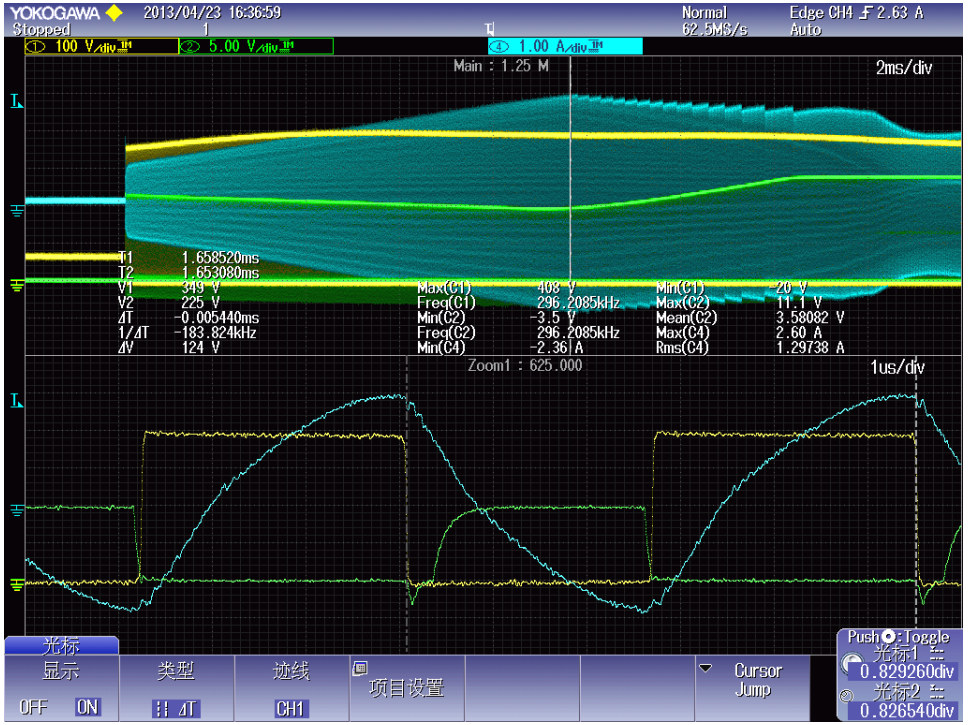

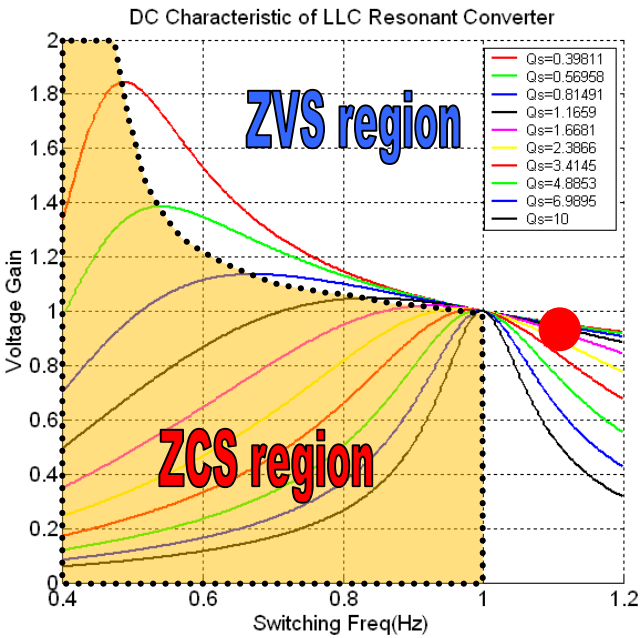

Operation Stage 2

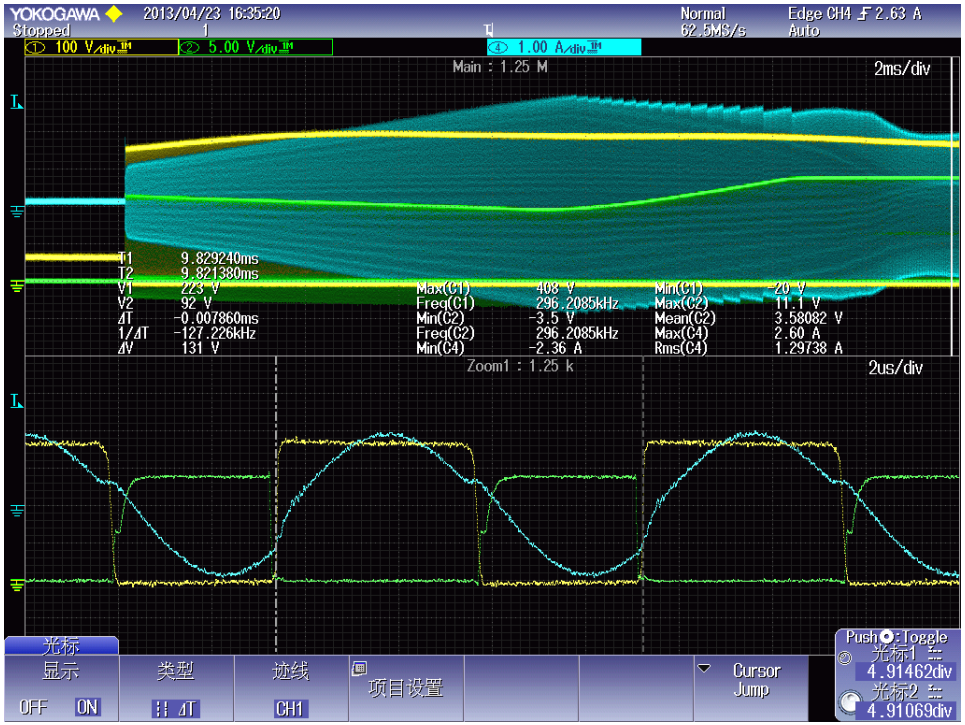

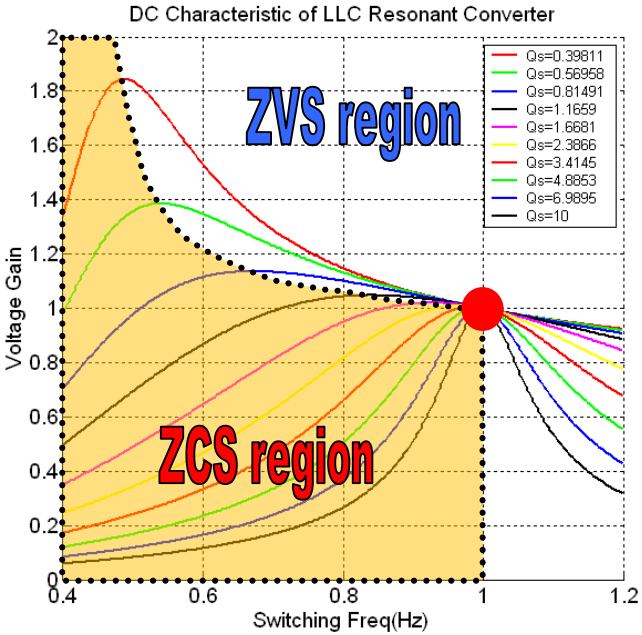

Operation Stage 3
short-circuit condition

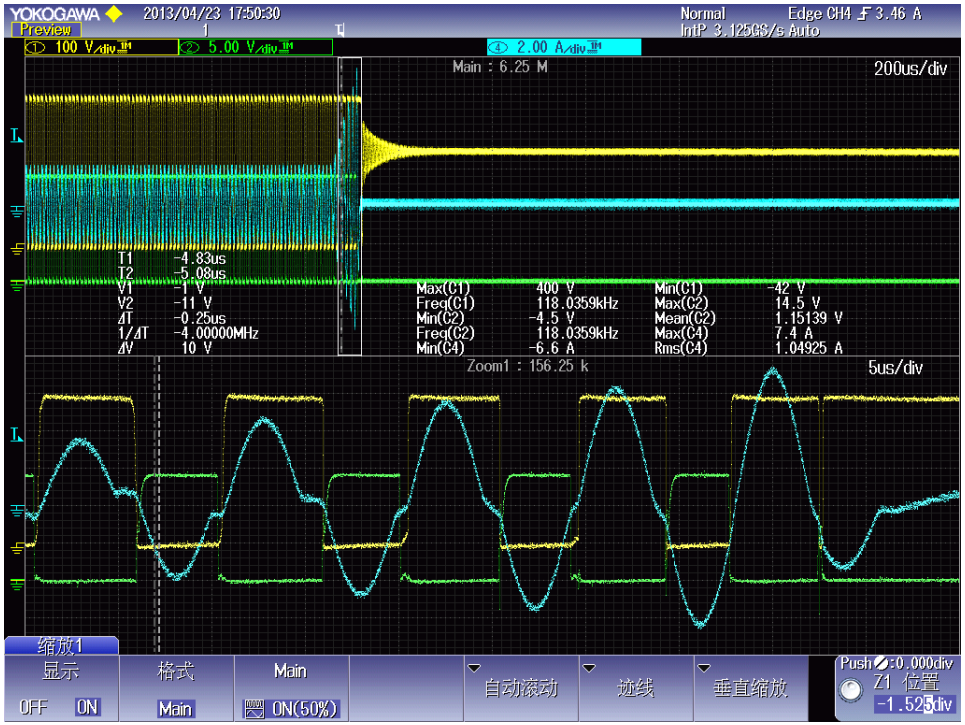

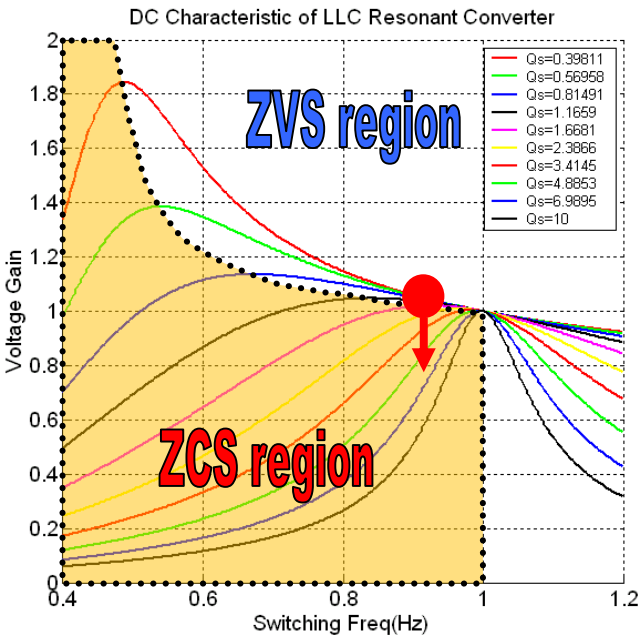

Operation Stage 3
short-circuit condition

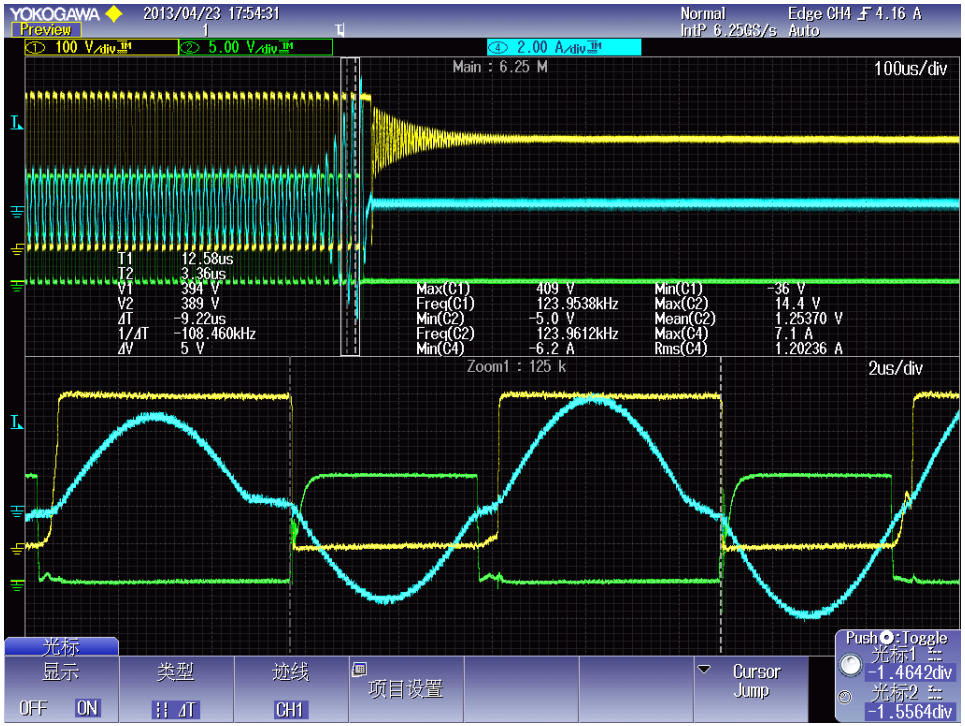

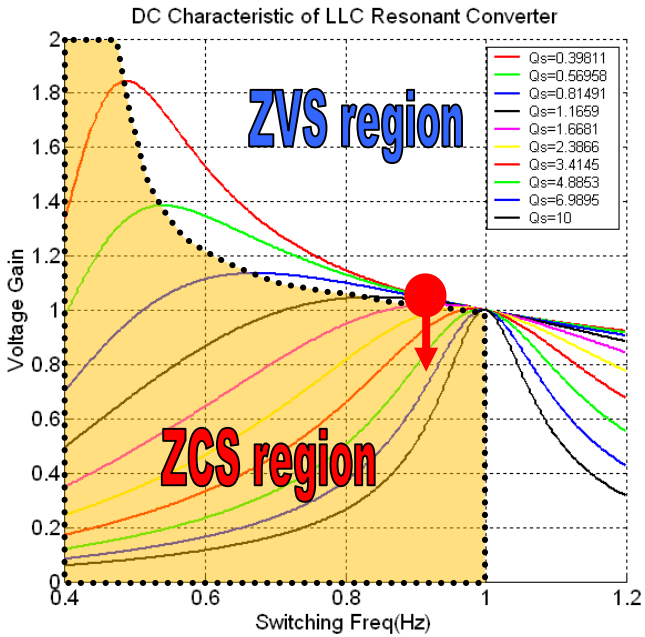

Operation Stage 3
short-circuit condition

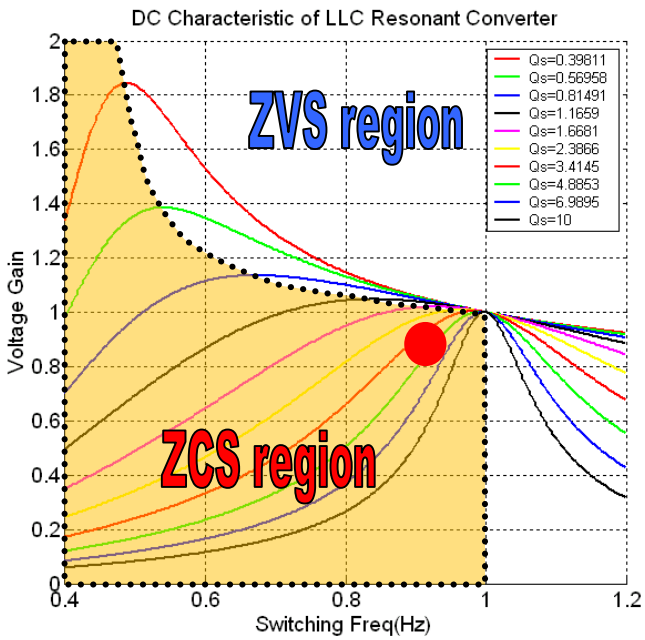

Operation Stage 3
short-circuit condition

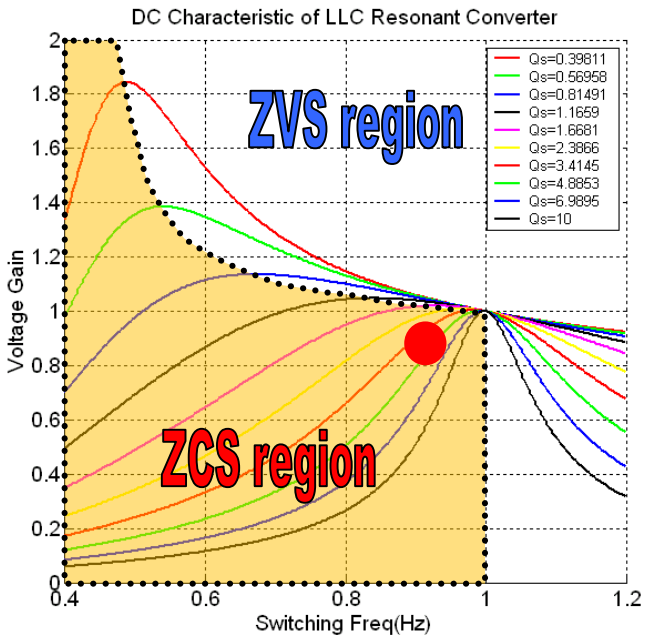

LLC resonant converter and operating waveforms

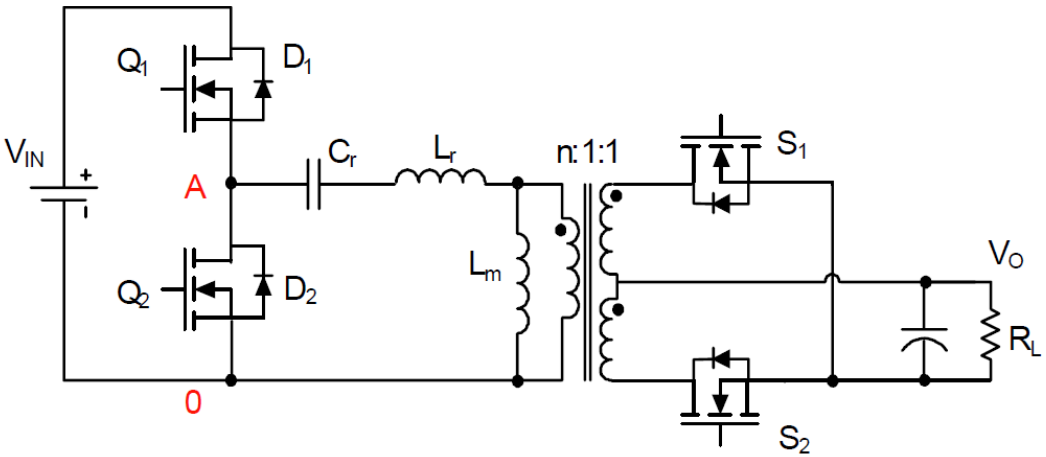

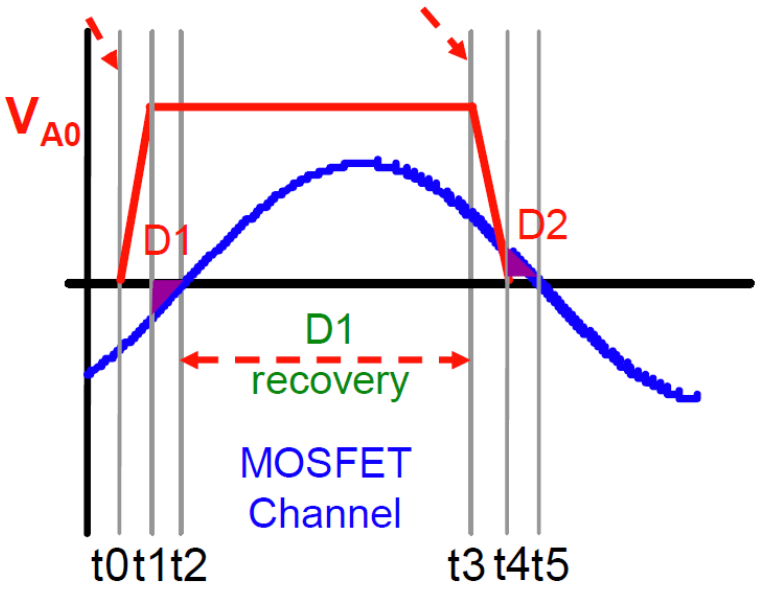

The failures occur when the current through the device is small, leading to a small reverse voltage applied to the device.

Operating Range for LLC Resonant Converter

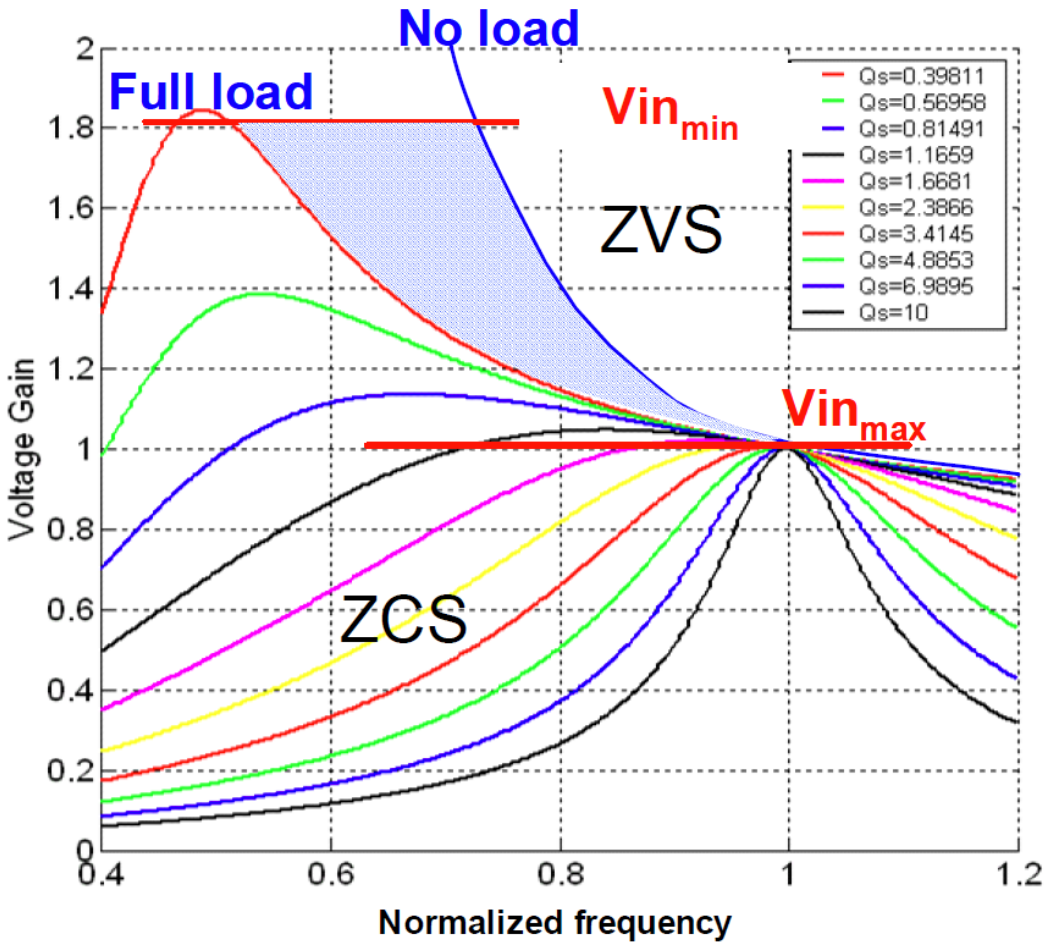

LLC resonant converter waveforms below resonant point

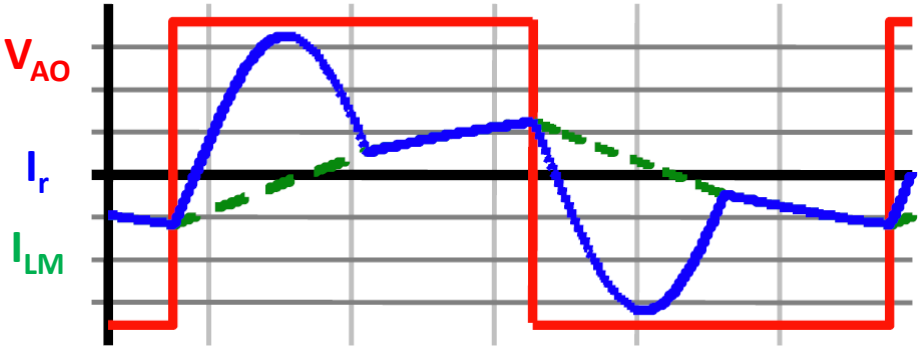

@ Full load

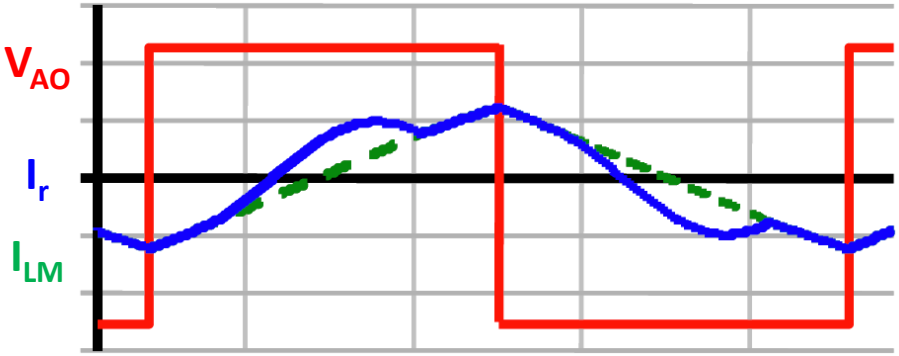

@ 10% load

LLC resonant converter waveforms at resonant point

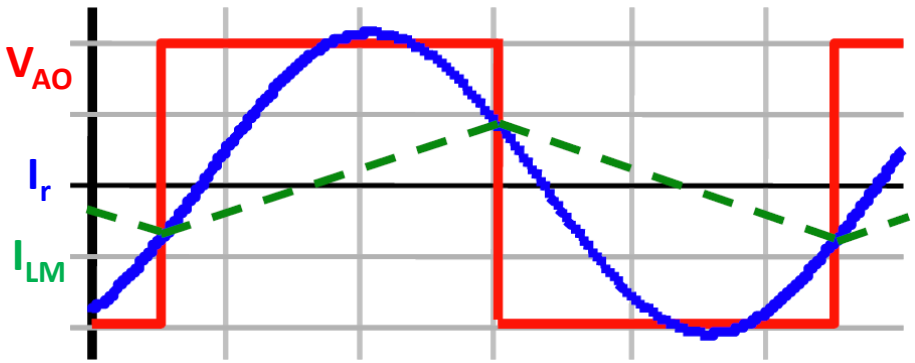

@ Full load

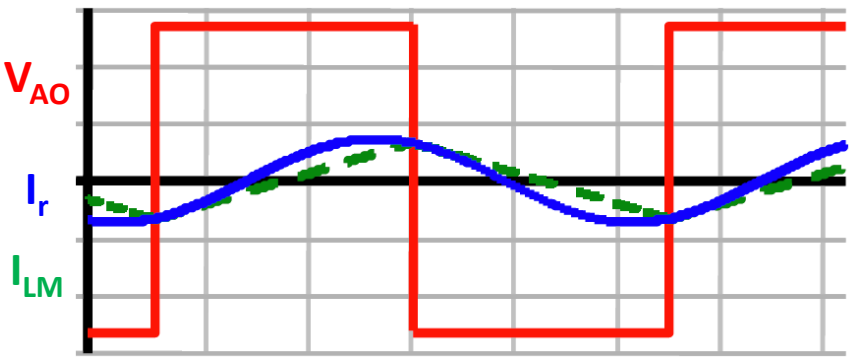

@ 10% load

Light load operation at the resonant point is the worst case operating condition for body diode reverse recovery in the LLC resonant converter.

Reverse recovery characteristics of high voltage MOSFETs

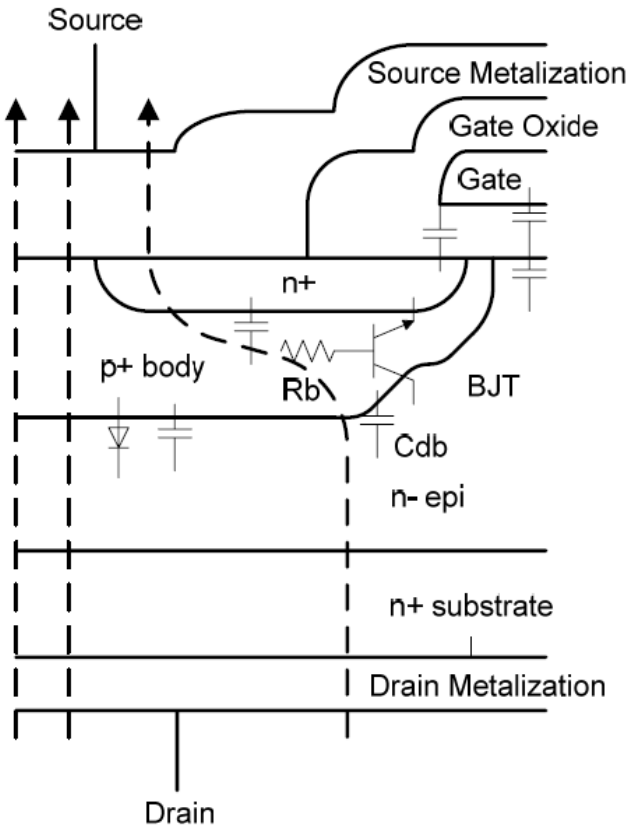

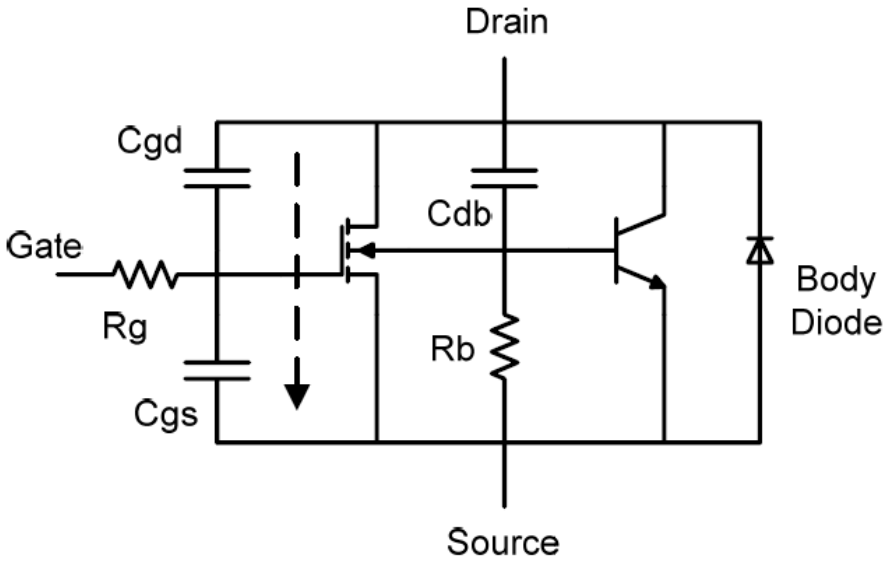

Reverse recovery characteristics of high voltage MOSFETs

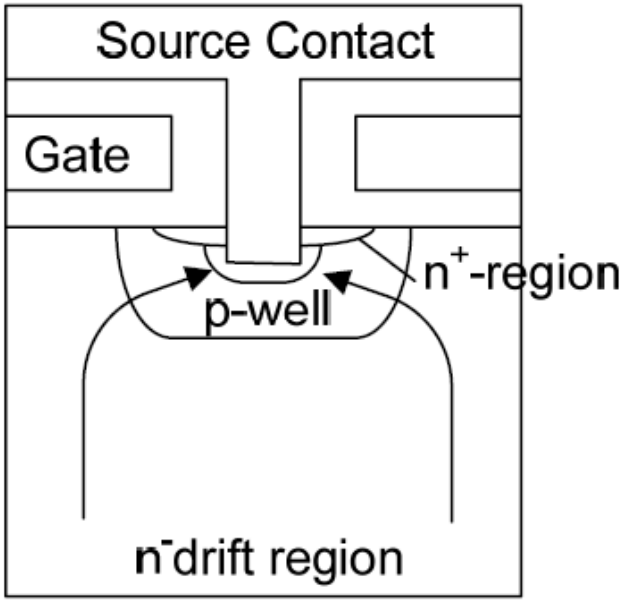

Conventional MOSFET

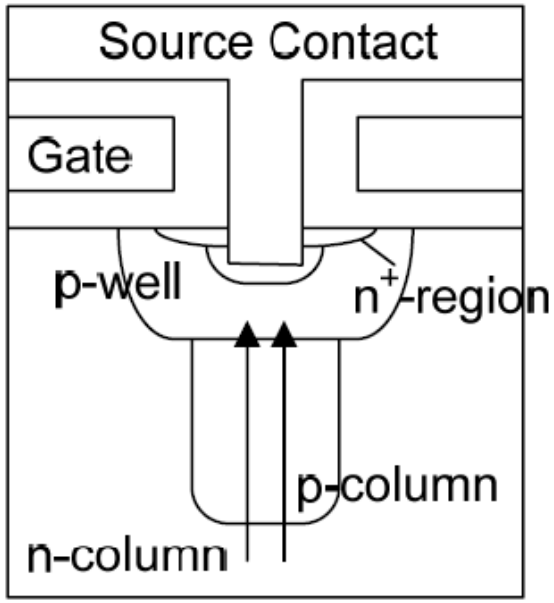

Super junction MOSFET

While a portion of the reverse current flows laterally through the p+ region in a conventional MOSFET, the reverse current in a super junction MOSFET flows through the P compensation columns and cannot trigger the intrinsic bipolar device. In this way, a super junction MOSFET cannot fall into secondary breakdown due to a large reverse current.

Thanks!

Email: Qiaoliang.chen@gmail.com

Chenqiaoliang@lonten.cc